DS-2CD1023G2-LIU(F)
2 MP Fixed Bullet Network Camera



- High quality imaging with 2 MP resolution
- Support Human and Vehicle Detection
- Smart Hybrid Light: advanced technology with long range
- Built-in microphone for real-time audio security
- Efficient H.265+ compression technology
- Support on-board storage up to 512 GB (SD card slot) (Optional)
- Water and dust resistant (IP67)

▪ Specification

Camera	
Image Sensor	1/2.9" Progressive Scan CMOS
Max. Resolution	1920 × 1080
Min. Illumination	Color: 0.005 Lux @ (F1.6, AGC ON), B/W: 0 Lux with IR
Shutter Time	1/3 s to 1/100,000 s
Day & Night	IR cut filter
Angle Adjustment	Pan: 0° to 360°, tilt: 0° to 90°, rotate: 0° to 360°
Lens	
Lens Type	Fixed focal lens, 2.8 and 4 mm optional
Focal Length & FOV	2.8 mm, horizontal FOV 103°, vertical FOV 56°, diagonal FOV 121° 4 mm, horizontal FOV 83°, vertical FOV 44°, diagonal FOV 99°
Lens Mount	M12
Iris Type	Fixed
Aperture	F1.6
DORI	
DORI	2.8 mm, D: 45 m, O: 18 m, R: 9 m, I: 4 m 4 mm, D: 56 m, O: 22 m, R: 11 m, I: 5 m
Illuminator	
Supplement Light Type	IR, White Light
Supplement Light Range	Up to 30 m
Smart Supplement Light	Yes
IR Wavelength	850 nm
Video	
Main Stream	50 Hz: 25 fps (1920 × 1080, 1280 × 720) 60 Hz: 30 fps (1920 × 1080, 1280 × 720)
Sub-Stream	50 Hz: 25 fps (640 × 480, 640 × 360) 60 Hz: 30 fps (640 × 480, 640 × 360)
Video Compression	Main stream: H.265+/H.265/H.264+/H.264, Sub-stream: H.265/H.264/MJPEG
Video Bit Rate	32 Kbps to 8 Mbps
H.264 Type	Baseline Profile, Main Profile, High Profile
H.265 Type	Main Profile
Bit Rate Control	CBR, VBR
Region of Interest (ROI)	1 fixed region for main stream
Audio	
Audio Type	Mono sound
Environment Noise Filtering	Yes
Audio Sampling Rate	8 kHz/16 kHz
Audio Compression	G.711ulaw/G.711alaw/G.722.1/G.726/MP2L2/PCM/AAC-LC
Audio Bit Rate	64 Kbps (G.711 ulaw)/64 Kbps (G.711 alaw)/16 Kbps (G.722.1)/16 Kbps (G.726)/32 to 160 Kbps (MP2L2)/16 to 64 Kbps (AAC-LC)
Network	
Security	Password protection, complicated password, watermark, basic and digest authentication for HTTP, WSSE and digest authentication for Open Network Video Interface, security audit log, host authentication (MAC address)

Simultaneous Live View	Up to 6 channels
API	Open Network Video Interface (Profile S, Profile T, Profile G (only -F model supports)), ISAPI, SDK
Protocols	TCP/IP, ICMP, DHCP, DNS, HTTP, RTP, RTSP, RTCP, NTP, IGMP, IPv4, IPv6, UDP, QoS, FTP, SMTP
User/Host	Up to 32 users 3 user levels: administrator, operator, and user
Client	iVMS-4200, Hik-Connect
Web Browser	Plug-in required live view: IE 10, IE 11, Local service: Chrome 57.0+, Firefox 52.0+
Image	
Wide Dynamic Range (WDR)	Digital WDR
SNR	≥ 52 dB
Day/Night Switch	Day, Night, Auto, Schedule
Image Enhancement	BLC, HLC, 3D DNR
Image Settings	Rotate mode, saturation, brightness, contrast, sharpness, gain, white balance, adjustable by client software or web browser
Privacy Mask	4 programmable polygon privacy masks
Interface	
Ethernet Interface	1 RJ45 10 M/100 M self-adaptive Ethernet port
On-Board Storage	-F: Built-in memory card slot, support microSD/microSDHC/microSDXC card, up to 512 GB
Built-in Microphone	Yes
Reset Key	-F: Yes
Event	
Basic Event	Motion detection (support alarm triggering by specified target types (human and vehicle)), video tampering alarm, exception
Linkage	Upload to FTP/memory card (-F), send email, notify surveillance center, trigger recording (-F), trigger capture
General	
Power	12 VDC ± 25%, 0.4 A, max. 5 W, Ø5.5 mm coaxial power plug, reverse polarity protection, PoE: IEEE 802.3af, Class 3, max. 6.5 W
Material	Metal & Plastic
Dimension	170.8 mm × 66 mm × 69.1 mm (6.7" × 2.6" × 2.7")
Package Dimension	216 mm × 121 mm × 118 mm (8.5" × 4.8" × 4.6")
Weight	Approx. 265 g (0.6 lb.)
With Package Weight	Approx. 495 g (1.1 lb.)
Storage Conditions	-30 °C to 60 °C (-22 °F to 140 °F). Humidity 95% or less (non-condensing)
Startup and Operating Conditions	-30 °C to 60 °C (-22 °F to 140 °F). Humidity 95% or less (non-condensing)
Language	English, Ukrainian
General Function	Heartbeat, anti-banding, mirror, password protection, password reset via email

Approval	
EMC	FCC: 47 CFR Part 15, Subpart B, CE-EMC: EN 55032: 2015, EN 61000-3-2:2019, EN 61000-3-3: 2013+A1:2019, EN 50130-4: 2011 +A1: 2014, RCM: AS/NZS CISPR 32: 2015, IC: ICES-003: Issue 7
Safety	UL: UL 62368-1, CB: IEC 62368-1: 2014+A11, CE-LVD: EN 62368-1: 2014/A11: 2017, BIS: IS 13252 (Part 1): 2010/IEC 60950-1: 2005
Environment	CE-RoHS: 2011/65/EU, WEEE: 2012/19/EU, Reach: Regulation (EC) No 1907/2006
Protection	IP67: IEC 60529-2013

▪ Typical Application

Hikvision products are classified into three levels according to their anti-corrosion performance. Refer to the following description to choose for your using environment.

This model has NO SPECIFIC PROTECTION.

Level	Description
Top-level protection	Hikvision products at this level are equipped for use in areas where professional anti-corrosion protection is a must. Typical application scenarios include coastlines, docks, chemical plants, and more.
Moderate protection	Hikvision products at this level are equipped for use in areas with moderate anti-corrosion demands. Typical application scenarios include coastal areas about 2 kilometers (1.24 miles) away from coastlines, as well as areas affected by acid rain.
No specific protection	Hikvision products at this level are equipped for use in areas where no specific anti-corrosion protection is needed.

▪ Available Model

DS-2CD1023G2-LIU (2.8/4 mm)

DS-2CD1023G2-LIUF (2.8/4 mm)

▪ Dimension

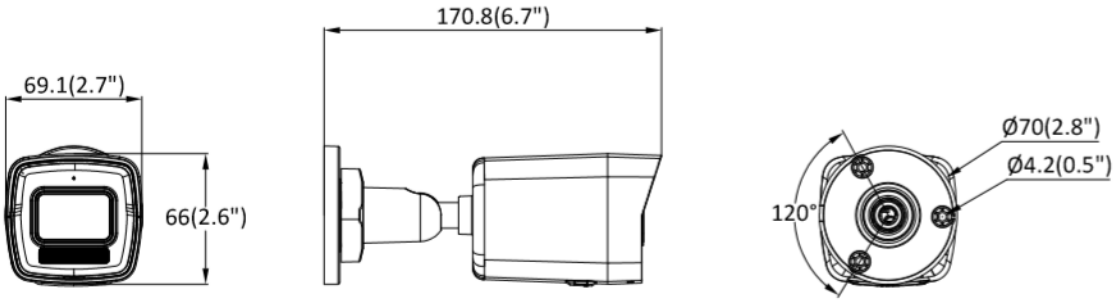

Unit: mm (inch)

▪ Accessory

▪ Optional

DS-1280ZJ-XS Junction Box


Headquarters
No.555 Qianmo Road, Binjiang District,
Hangzhou 310051, China
T +86-571-8807-5998
www.hikvision.com

Follow us on social media to get the latest product and solution information.

Hikvision HikvisionHQ HikvisionHQ Hikvision_Global Hikvision Corporate Channel hikvisionhq

©Hikvision Digital Technology Co., Ltd. 2022 I Data subject to change without notice I

DS-2CD1323G2-LIU(F)
2 MP Fixed Turret Network Camera



- High quality imaging with 2 MP resolution
- Support Human and Vehicle Detection
- Smart Hybrid Light: advanced technology with long range
- Built-in microphone for real-time audio security
- Support on-board storage up to 512 GB (SD card slot) (Optional)
- Efficient H.265+ compression technology
- Water and dust resistant (IP67)

▪ Specification

Camera	
Image Sensor	1/2.9" Progressive Scan CMOS
Max. Resolution	1920 × 1080
Shutter Time	1/3 s to 1/100,000 s
Min. Illumination	Color: 0.005 Lux @ (F1.6, AGC ON), B/W: 0 Lux with IR
Day & Night	IR cut filter
Angle Adjustment	Pan: 0° to 360°, tilt: 0° to 75°, rotate: 0° to 360°
Lens	
Lens Type	Fixed focal lens, 2.8 and 4 mm optional
Focal Length & FOV	2.8 mm, horizontal FOV 103°, vertical FOV 56°, diagonal FOV 121° 4 mm, horizontal FOV 83°, vertical FOV 44°, diagonal FOV 99°
Lens Mount	M12
Iris Type	Fixed
Aperture	F1.6
DORI	
DORI	2.8 mm, D: 45 m, O: 18 m, R: 9 m, I: 4 m 4 mm, D: 56 m, O: 22 m, R: 11 m, I: 5 m
Illuminator	
Supplement Light Type	IR, White Light
Supplement Light Range	Up to 30 m
Smart Supplement Light	Yes
IR Wavelength	850 nm
Video	
Main Stream	50 Hz: 25 fps (1920 × 1080, 1280 × 720) 60 Hz: 30 fps (1920 × 1080, 1280 × 720)
Sub-Stream	50 Hz: 25 fps (640 × 480, 640 × 360) 60 Hz: 30 fps (640 × 480, 640 × 360)
Video Compression	Main stream: H.265+/H.265/H.264+/H.264, Sub-stream: H.265/H.264/MJPEG
Video Bit Rate	32 Kbps to 8 Mbps
H.264 Type	Baseline Profile, Main Profile, High Profile
H.265 Type	Main Profile
Bit Rate Control	CBR, VBR
Region of Interest (ROI)	1 fixed region for main stream
Audio	
Audio Type	Mono sound
Environment Noise Filtering	Yes
Audio Sampling Rate	8 kHz/16 kHz
Audio Compression	G.711ulaw/G.711alaw/G.722.1/G.726/MP2L2/PCM/AAC-LC
Audio Bit Rate	64 Kbps (G.711 ulaw)/64 Kbps (G.711 alaw)/16 Kbps (G.722.1)/16 Kbps (G.726)/32 to 160 Kbps (MP2L2)/16 to 64 Kbps (AAC-LC)
Network	
Security	Password protection, complicated password, watermark, basic and digest authentication for HTTP, WSSE and digest authentication for Open Network Video Interface, security audit log, host authentication (MAC address)

Simultaneous Live View	Up to 6 channels
API	Open Network Video Interface (Profile S, Profile T, Profile G (only -F model supports)), ISAPI, SDK
Protocols	TCP/IP, ICMP, DHCP, DNS, HTTP, RTP, RTSP, RTCP, NTP, IGMP, IPv4, IPv6, UDP, QoS, FTP, SMTP
User/Host	Up to 32 users 3 user levels: administrator, operator, and user
Client	iVMS-4200, Hik-Connect
Web Browser	Plug-in required live view: IE 10, IE 11, Local service: Chrome 57.0+, Firefox 52.0+
Image	
Wide Dynamic Range (WDR)	Digital WDR
SNR	≥ 52 dB
Day/Night Switch	Day, Night, Auto, Schedule
Image Enhancement	BLC, HLC, 3D DNR
Image Settings	Rotate mode, saturation, brightness, contrast, sharpness, gain, white balance, adjustable by client software or web browser
Privacy Mask	4 programmable polygon privacy masks
Interface	
Ethernet Interface	1 RJ45 10 M/100 M self-adaptive Ethernet port
On-Board Storage	-F: Built-in memory card slot, support microSD/microSDHC/microSDXC card, up to 512 GB
Built-in Microphone	Yes
Reset Key	-F: Yes
Event	
Basic Event	Motion detection (support alarm triggering by specified target types (human and vehicle)), video tampering alarm, exception
Linkage	Upload to FTP/memory card (-F), send email, notify surveillance center, trigger recording (-F), trigger capture
General	
Power	12 VDC ± 25%, 0.4 A, max. 5 W, Ø5.5 mm coaxial power plug, reverse polarity protection, PoE: IEEE 802.3af, Class 3, max: 6.5 W
Material	Metal & Plastic
Dimension	Ø110 mm × 89.2 mm (Ø4.3" × 3.5")
Package Dimension	150 mm × 150 mm × 141 mm (5.9" × 5.9" × 5.6")
Weight	Approx. 340 g (0.7 lb.)
With Package Weight	Approx. 560 g (1.2 lb.)
Storage Conditions	-30 °C to 60 °C (-22 °F to 140 °F). Humidity 95% or less (non-condensing)
Startup and Operating Conditions	-30 °C to 60 °C (-22 °F to 140 °F). Humidity 95% or less (non-condensing)
Language	English, Ukrainian
General Function	Heartbeat, anti-banding, mirror, password protection, password reset via email

Approval	
EMC	FCC: 47 CFR Part 15, Subpart B, CE-EMC: EN 55032: 2015, EN 61000-3-2:2019, EN 61000-3-3: 2013+A1:2019, EN 50130-4: 2011 +A1: 2014, RCM: AS/NZS CISPR 32: 2015, IC: ICES-003: Issue 7
Safety	UL: UL 62368-1, CB: IEC 62368-1: 2014+A11, CE-LVD: EN 62368-1: 2014/A11: 2017, BIS: IS 13252 (Part 1): 2010/IEC 60950-1: 2005
Environment	CE-RoHS: 2011/65/EU, WEEE: 2012/19/EU, Reach: Regulation (EC) No 1907/2006
Protection	IP67: IEC 60529-2013

▪ Typical Application

Hikvision products are classified into three levels according to their anti-corrosion performance. Refer to the following description to choose for your using environment.

This model has NO SPECIFIC PROTECTION.

Level	Description
Top-level protection	Hikvision products at this level are equipped for use in areas where professional anti-corrosion protection is a must. Typical application scenarios include coastlines, docks, chemical plants, and more.
Moderate protection	Hikvision products at this level are equipped for use in areas with moderate anti-corrosion demands. Typical application scenarios include coastal areas about 2 kilometers (1.24 miles) away from coastlines, as well as areas affected by acid rain.
No specific protection	Hikvision products at this level are equipped for use in areas where no specific anti-corrosion protection is needed.

▪ Available Model

DS-2CD1323G2-LIUF (2.8/4 mm)

DS-2CD1323G2-LIU (2.8/4 mm)

▪ Dimension

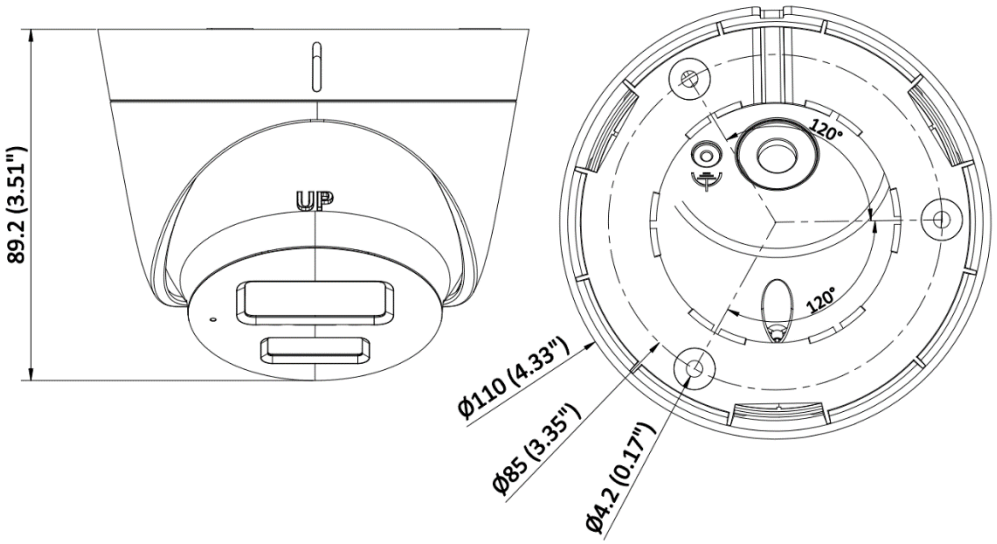

Unit:mm (inch)

▪ Accessory

▪ Optional

DS-1280ZJ-S Junction Box	DS-1281ZJ-S Inclined Ceiling Mount	DS-1275ZJ-SUS Vertical Pole Mount	DS-1272ZJ-110-TRS Wall Mount	DS-1276ZJ-SUS Corner Mount
				

Headquarters
No.555 Qianmo Road, Binjiang District,
Hangzhou 310051, China
T +86-571-8807-5998
www.hikvision.com

Follow us on social media to get the latest product and solution information.

Hikvision HikvisionHQ HikvisionHQ Hikvision_Global Hikvision Corporate Channel hikvisionhq

©Hikvision Digital Technology Co., Ltd. 2022 I Data subject to change without notice I

DS-7732NXI-K4(D)(标配)/BRA/CKD
32-ch 1.5U K Series AcuSense 4K NVR





- Up to 32-ch IP camera inputs
- H.265+/H.265/H.264+/H.264 video formats
- Up to 2-ch@12 MP or 4-ch@8 MP or 8-ch@4 MP or 16-ch@1080p decoding capacity
- Up to 256 Mbps incoming bandwidth
- Adopt Hikvision Acusense technology to minimize manual effort and security costs

▪ Function

Smart Function

- All channels support Motion Detection 2.0
- 2-ch video analysis for human and vehicle recognition to reduce false alarm
- 1-ch facial detection and analytics for video stream, or 4-ch face Picture Comparison
- Smart search for the selected area in the video, and smart playback to improve the playback efficiency

Professional and Reliability

- H.265+ compression effectively reduces the storage space by up to 75%
- Adopt stream over TLS encryption technology which provides more secure stream transmission service

HD Video Output

- Provide independent HDMI and VGA outputs
- HDMI video output at up to 4K resolution

Storage and Playback

- Up to 4 SATA interfaces for HDD connection (up to 16 TB capacity per HDD)
- 16-ch synchronous playback

Network & Ethernet Access

- 2 self-adaptive 10/100/1000 Mbps Ethernet interfaces
- Hik-Connect for easy network management

▪ Specification

Intelligent Analytics	
AI by Device	Facial recognition, perimeter protection, motion detection 2.0
AI by Camera	Facial recognition, perimeter protection, throwing objects from building, motion detection2.0, ANPR, VCA
Facial Recognition	
Facial Detection and Analytics	Face picture comparison, human face capture, face picture search
Face Picture Library	Up to 16 face picture libraries, with up to 20,000 face pictures in total (each picture ≤ 4 MB, total capacity ≤ 1 GB)
Facial Detection and Analytics Performance	1-ch, 8 MP
Face Picture Comparison	4-ch
Motion Detection 2.0	
By Camera	All channels
Perimeter Protection	
By Device	2-ch, 4 MP (HD network camera, H.264/H.265) video analysis for human and vehicle recognition to reduce false alarm
By Camera	All channels
Video and Audio	
IP Video Input	32-ch
Incoming Bandwidth	256 Mbps
Outgoing Bandwidth	160 Mbps
HDMI Output	1-ch, 4K (3840 × 2160)/30Hz, 2K (2560 × 1440)/60Hz, 1920 × 1080/60Hz, 1600 × 1200/60Hz, 1280 × 1024/60Hz, 1280 × 720/60Hz, 1024 × 768/60Hz
VGA Output	1-ch, 1920 × 1080/60Hz, 1280 × 1024/60Hz, 1280 × 720/60Hz
Video Output Mode	HDMI/VGA independent output
CVBS Output	N/A
Audio Output	1-ch, RCA (Linear, 1 KΩ)
Two-Way Audio	1-ch, RCA (2.0 Vp-p, 1 KΩ, using the audio input)
Decoding	
Decoding Format	H.265/H.265+/H.264+/H.264
Recording Resolution	12 MP/8 MP/6 MP/5 MP/4 MP/3 MP/1080p/UXGA/ 720p/VGA/4CIF/DCIF/2CIF/CIF/QCIF
Synchronous playback	16-ch
Decoding Capability	AI on: 2-ch@12 MP (30 fps)/3-ch@8 MP (30 fps)/6-ch@4 MP (30 fps)/12-ch@1080p (30 fps) AI off: 2-ch@12 MP (30 fps)/4-ch@8 MP (30 fps)/8-ch@4 MP (30 fps)/16-ch@1080p (30 fps) Smooth Playback (HC) ON & AI ON: 1-ch@12 MP (30 fps)/2-ch@8 MP (30 fps)/5-ch@4 MP (30 fps)/11-ch@1080p (30 fps) Smooth Playback (HC) ON & AI OFF: 2-ch@12 MP (30 fps)/3-ch@8 MP (30 fps)/7-ch@4 MP (30 fps)/15-ch@1080p (30 fps)
Stream Type	Video, Video & Audio
Audio Compression	G.711ulaw/G.711alaw/G.722/G.726/AAC

Network	
Remote Connection	128
API	ONVIF (profile S/G); SDK; ISAPI
Compatible Browser	IE11, Chrome V57, Firefox V52, Safari V12, Edge V89, or above version
Network Protocol	TCP/IP, DHCP, IPv4, IPv6, DNS, DDNS, NTP, RTSP, SADP, SMTP, SNMP, NFS, iSCSI, ISUP, UPnP™, HTTP, HTTPS
Network Interface	2 RJ-45 10/100/1000 Mbps self-adaptive Ethernet interfaces
Auxiliary Interface	
SATA	4 SATA interfaces
Capacity	Up to 16 TB capacity for each HDD
Serial Interface	2 RS-485 (half-duplex), 1 RS-232
Alarm In/Out	
USB Interface	Front panel: 2 × USB 2.0; Rear panel: 1 × USB 3.0
Ctrl 12V	N/A (optional to support)
DC 12V	N/A (optional to support)
General	
GUI Language	English, Russian, Bulgarian, Hungarian, Greek, German, Italian, Czech, Slovak, French, Polish, Dutch, Portuguese, Spanish, Romanian, Turkish, Japanese, Danish, Swedish Language, Norwegian, Finnish, Korean, Traditional Chinese, Thai, Estonian, Vietnamese, Croatian, Slovenian, Serbian, Latvian, Lithuanian, Uzbek, Kazakh, Arabic, Ukrainian, Kyrgyz, Brazilian Portuguese, Indonesian
Power Supply	100 to 240 VAC, 50 to 60Hz
Consumption	≤ 20 W (without HDD)
Working Temperature	-10 °C to 55 °C (14 °F to 131 °F)
Working Humidity	10 to 90 %
Dimension (W × D × H)	445 × 400 × 75 mm (17.5"× 15.7" × 3.0")
Weight	≤ 5 kg (without HDD, 11 lb.)
Certification	
CE	EN 55032: 2015, EN 61000-3-2, EN 61000-3-3, EN 50130-4, EN 55035: 2017
Obtained Certification	CE, FCC, IC, CB, KC, UL, Rohs, Reach, WEEE, RCM, UKCA, LOA, BIS

▪ Physical Interface

No.	Description	No.	Description
1	LAN 1 and LAN 2 interfaces	7	USB 3.0 interface
2	Audio in	8	Alarm in, alarm out and RS-485
3	Audio out	9	GND
4	HDMI interface	10	Power supply
5	VGA interface	11	Power switch
6	RS-232 serial interface		

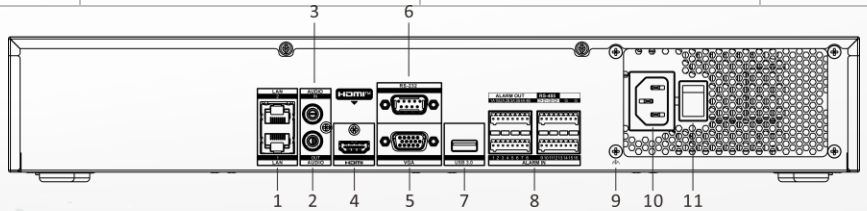

▪ Available Model

DS-7732NXI-K4(D)/BRA

▪ Dimension

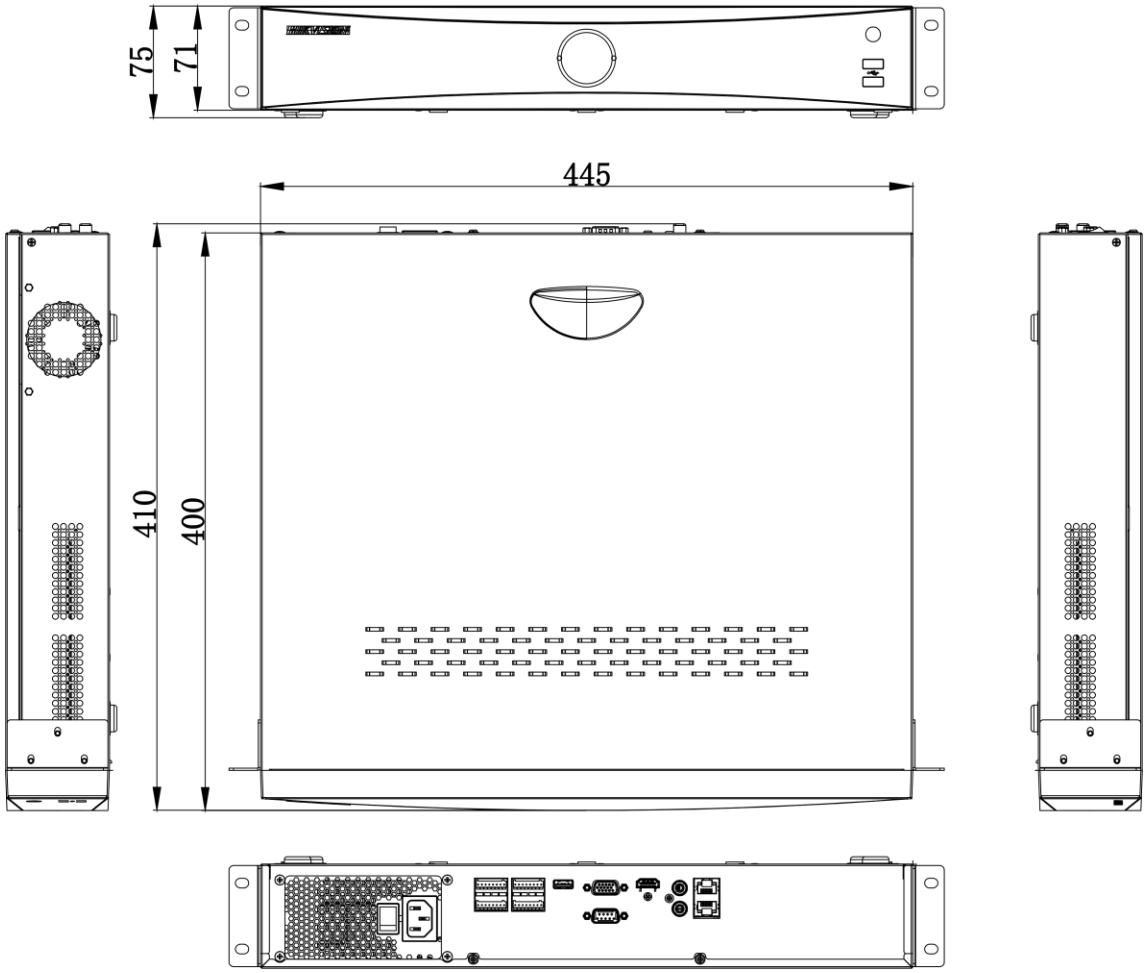

scale/1:1;Unit/mm

See Far, Go Further

www.hikvision.com
support@hikvision.com

© Hangzhou Hikvision Digital Technology Co., Ltd. Unless otherwise agreed, Hikvision makes no warranties, express or implied. We reserve the right to introduce modifications without notice.

HIKVISION®