MEMORIA DE CÁLCULO ESTRUCTURAL

GOBERNACIÓN DEL CESAR

MEJORAMIENTO DE LA INFRAESTRUCTURA EDUCATIVA EN DISTINTOS MUNICIPIOS DEL DEPARTAMENTO DEL CESAR

INSTITUCIÓN EDUCATIVA SANTA ISABEL, EN EL CORREGIMIENTO DE SANTA ISABEL, MUNICIPIO DE CURUMANI.

ZONA CUBIERTA PORTERIA

NORMA DE DISEÑO
NSR-10

William Fuentes

INGENIERO CALCULISTA
ING. WILLIAM FUENTES LACOUTURE
M.P. 25202150640 CND

MEMORIA DE CÁLCULO ESTRUCTURAL

MEJORAMIENTO DE LA INFRAESTRUCTURA EDUCATIVA EN DISTINTOS MUNICIPIOS DEL DEPARTAMENTO DEL CESAR

INSTITUCIÓN EDUCATIVA SANTA ISABEL, EN EL CORREGIMIENTO DE SANTA ISABEL, MUNICIPIO DE CURUMANI.

ZONA CUBIERTA PORTERIA

CONTROL DE REVISIONES		
REV	**FECHA**	**DESCRIPCIÓN**
1	06/26	Edición Inicial

CONTROL DE COPIAS	
NUMERO	**DESTINATARIO**
1	Propietario/Responsable

Elaboró: Ing. – **INGENIERO CALCULISTA** **ING. WILLIAM FUENTES LACOUTURE** **M.P. 25202150640 CND**	Revisó: Ing. I, Civil M.P.

MEMORIA DE CÁLCULO ESTRUCTURAL

MEJORAMIENTO DE LA INFRAESTRUCTURA EDUCATIVA EN DISTINTOS MUNICIPIOS DEL DEPARTAMENTO DEL CESAR

INSTITUCIÓN EDUCATIVA SANTA ISABEL, EN EL CORREGIMIENTO DE SANTA ISABEL, MUNICIPIO DE CURUMANI - ZONA CUBIERTA PORTERIA

Contenido

LOCALIZACIÓN 5

NORMAS 5

DESCRIPCIÓN DE LA ESTRUCTURA 5

PARÁMETROS DE DISEÑO SÍSMICO 6

CARACTERISTICAS DE MATERIALES 7

- Resistencia a compresión del concreto 7
- Módulo de elasticidad del concreto 7
- Acero de refuerzo 7

CARGAS 7

IDENTIFICACIÓN DE CARGAS EN MODELO 8

COMBINACIONES DE CARGA 8

MODELO ANÁLITICO 10

CARGAS INCLUIDAS EN EL MODELO 11

ANÁLISIS SÍSMICO 15

- Verificación de fuerza sísmica en la base 15
- Porcentaje de participación de masas 15

VERIFICACIÓN DE REQUISITOS ESPECIALES ACORDE AL CAPITULO A.12 NSR-10 17

- DERIVAS POR UMBRAL DE DAÑO 18

ANÁLISIS DE IRREGULARIDADES 19

- Irregularidades en planta 19
- Irregularidades en altura 21
- Ausencia de redundancia 22

VERIFICACIÓN DE DEFLEXIONES 23

DISEÑO DE ELEMENTOS ESTRUCTURALES 24

- Diseño de elementos en concreto reforzado 24

MEMORIA DE CÁLCULO ESTRUCTURAL

MEJORAMIENTO DE LA INFRAESTRUCTURA EDUCATIVA EN DISTINTOS MUNICIPIOS DEL DEPARTAMENTO DEL CESAR

INSTITUCIÓN EDUCATIVA SANTA ISABEL, EN EL CORREGIMIENTO DE SANTA ISABEL, MUNICIPIO DE CURUMANI - ZONA CUBIERTA PORTERIA

Diseño de elementos metálicos en cubierta.....24

Diseño de elementos de cimentación. 49

LOCALIZACIÓN

El presente proyecto se refiere a los MEJORAMIENTO DE LA INFRAESTRUCTURA EDUCATIVA EN DISTINTOS MUNICIPIOS DEL DEPARTAMENTO DEL CESAR.

NORMAS

Ley 400 de 1997 y sus decretos reglamentarios

- Decreto 926 del 19 de marzo de 2010
- Decreto 2525 del 13 de julio de 2010
- Decreto 092 del 17 de enero de 2011
- Decreto 340 del 13 de febrero de 2012
- Decreto 945 del 5 de junio de 2017
- Decreto 2113 del 25 de noviembre de 2019
- Resolución 0017 del 4 de diciembre de 2017

DESCRIPCIÓN DE LA ESTRUCTURA

La estructura de la zona de acceso junto a la porteria se compone por sistema estructural porticado en perfiles PTE. La cimentación será superficial. La cubierta será liviana.

CIMENTACIÓN	"Dada las características del proyecto se considera entonces viable el uso de un sistema de cimentación superficial para la transmisión de las cargas de las estructuras al terreno por medio de zapatas desplantadas a una profundidad mínima de 1.50 metros y unidas entre sí por vigas de amarre diseñadas por el ingeniero estructural. La capacidad admisible del terreno será de 15.0 Ton/m2."
SISTEMA ESTRUCTURAL	Sistema de pórticos.
SISTEMA DE RESISTENCIA SÍSMICA	Porticos en perfiles tubulares PTE.
COEFICIENTE DE DISIPACIÓN DE ENERGÍA BÁSICO	1.50
FACTOR DE SOBRE RESISTENCIA	1.50
ALTURA MÁXIMA	12.0 m.
GRADO DE CAPACIDAD DE DISIPACIÓN DE ENERGÍA	Mínimo - DMI

PARÁMETROS DE DISEÑO SÍSMICO

PERFIL DE SUELO	D
ACELERACIÓN HORIZONTAL PICO EFECTIVA Aa	0.15
VELOCIDAD HORIZONTAL PICO EFECTIVA Av	0.10
COEFICIENTE DE AMPLIACIÓN SÍSMICA EN PERIODOS CORTOS Fa	1.50
COEFICIENTE DE AMPLIACIÓN SÍSMICA EN PERIODOS MEDIOS Fv	2.40
GRUPO DE USO	III – Estructuras de atención a la comunidad
COEFICIENTE DE IMPORTANCIA	1.25

ESPECTRO DE DISEÑO					
UBICACIÓN	Curumani - Cesar				
DATOS					
GRUPO DE USO	III	**COEFICIENTE DE IMPORTANCIA**			1.25
PERFIL DE SUELO	D	**Fa**	1.5	**Fv**	2.4
AaFal	0.28125	**Aa**	0.15	**Av**	0.1
Sa	0.703125	**T0**	0.10666667	**Tc**	0.512

T (s)	Sad (g)
0	0.281
0.106666667	0.703
0.512	0.703
0.862	0.418
1.212	0.297
1.562	0.230
1.912	0.188
2.262	0.159
2.612	0.138
2.962	0.122
3.312	0.109
3.662	0.098
4.012	0.090
4.362	0.083
5.76	0.063

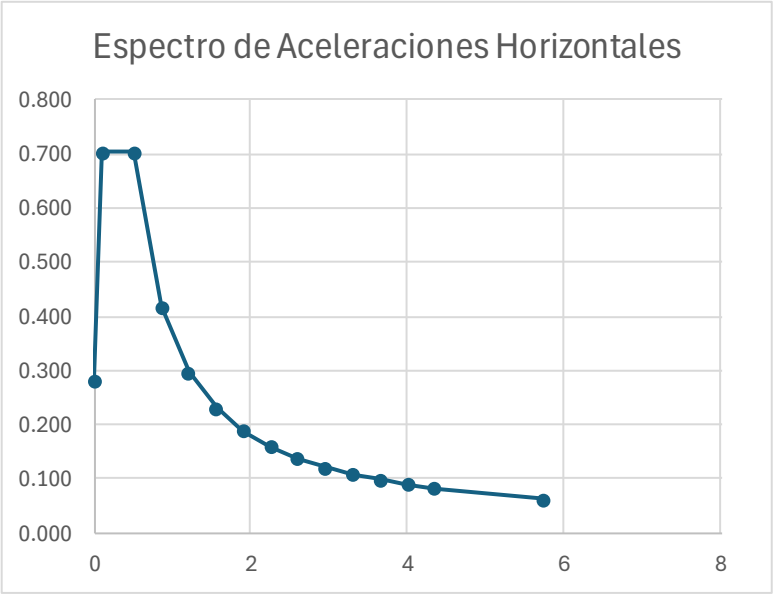

CARACTERISTICAS DE MATERIALES

Los elementos estructurales de la estructura se analizaron con las siguientes características:

Resistencia a compresión del concreto

La resistencia a la compresión del concreto establecida es de:

Columnas y vigas: 21 MPa.
Cimentación: 21 MPa.

Módulo de elasticidad del concreto

El agregado usado para el concreto estructural deberá ser de origen metamórfico.

Su módulo de elasticidad se calcula según lo indica C.8.5.1.

Módulo de elasticidad del concreto: 3900√21MPa=17872.04 MPa

Acero de refuerzo

El refuerzo de los elementos de concreto y muros de perforación vertical consiste en varillas corrugadas de acero con diámetros desde 4mm hasta 1" y las siguientes resistencias a tensión fy.

Varillas de refuerzo: 420 MPa.
Mallas Electrosoldadas: 480 MPa.
Perfiles estructurales Tipo I: ASTM A572 G50 Fy=345 MPa Fu= 450 Mpa
Tuberia estructural: ASTM A500 Fy=345 MPa Fu=425 MPa
Platinas: ASTM A36
Tornillos y Pernos: A325

El acero de refuerzo utilizado debe cumplir con la norma NTC-2289, con módulo de elasticidad de 200000 MPa

CARGAS

Peso propio de los elementos estructurales:

Todos los elementos de concreto reforzado: 2400 Kg/m3
Todos los elementos en acero: 7800 Kg/m3

Cargas adicionales al peso propio de los elementos estructurales (gravitacionales):

Carga viva en cubierta: 50 Kg/m2
Carga muerta sobreimpuesta en cubierta: 80 kg/m2
Carga viento a compresión en cubierta: 50 kg/m2
Carga viento a succión en cubierta: 56.08 kg/m2
Carga viento a compresión en fachada de cubierta: 150.26 kg/m2
Carga viento a succión en fachada de cubierta: 114.33 kg/m2

IDENTIFICACIÓN DE CARGAS EN MODELO

Condiciones de carga:

D	Carga muerta – Peso Propio
DS	Carga muerta sobreimpuesta
L	Carga Viva
SX	Cargas sísmicas En dirección X
SY	Cargas sísmicas En dirección Y
W	Carga de viento

COMBINACIONES DE CARGA

Name	Load Name	SF	Load Name	SF	Load Name	SF	Load Name	SF
CIM 0,6D	Dead	0.6	DS	0.6				
CIM 0,6D+0.7SX	Dead	0.6	DS	0.6	SX	0.7		
CIM 0,6D+0.7SY	Dead	0.6	DS	0.6	SY	0.7		
CIM 1.0D	Dead	1	DS	1				
CIM 1.0D+0.7SX	Dead	1	DS	1	SX	0.7		
CIM 1.0D+0.7SY	Dead	1	DS	1	SY	0.7		
CIM 1.0D+0.75L+0.5SX	Dead	1	DS	1	Live	0.75	SX	0.5
CIM 1.0D+0.75L+0.5SY	Dead	1	DS	1	Live	0.75	SY	0.5
CIM 1.0D+1.0L	Dead	1	DS	1	Live	1		
DES 0.6D+1.0SX	Dead	0.6	DS	0.6	SX	1		
DES 0.6D+1.0SY	Dead	0.6	DS	0.6	SY	1		
DES 1.0D+0.75L+0.75SX	Dead	1	DS	1	Live	0.75	SX	0.75
DES 1.0D+0.75L+0.75SY	Dead	1	DS	1	Live	0.75	SY	0.75
DES 1.0D+1.0SX	Dead	1	DS	1	SX	1		
DES 1.0D+1.0SY	Dead	1	DS	1	SY	1		
ELS 0.6D+0.7SX	Dead	0.6	DS	0.6	SX	0.7		
ELS 0.6D+0.7SY	Dead	0.6	DS	0.6	SY	0.7		
ELS 0.6D+1.0W1	Dead	0.6	DS	0.6	W1	1		
ELS 0.6D+1.0W2	Dead	0.6	DS	0.6	W2	1		
ELS 1.0D	Dead	1	DS	1				
ELS 1.0D+0.7SX	Dead	1	DS	1	SX	0.7		
ELS 1.0D+0.7SY	Dead	1	DS	1	SY	0.7		
ELS 1.0D+0.75L	Dead	1	DS	1	Live	0.75		
ELS 1.0D+0.75L+0.525SX	Dead	1	DS	1	Live	0.75	SX	0.525
ELS 1.0D+0.75L+0.525SY	Dead	1	DS	1	Live	0.75	SY	0.525

Name	Load Name	SF	Load Name	SF	Load Name	SF	Load Name	SF
ELS 1.0D+0.75W1+0.75L	Dead	1	DS	1	Live	0.75	W1	0.75
ELS 1.0D+0.75W2+0.75L	Dead	1	DS	1	Live	0.75	W2	0.75
ELS 1.0D+1.0L	Dead	1	DS	1	Live	1		
ELS 1.0D+1.0W1	Dead	1	DS	1	W1	1		
ELS 1.0D+1.0W2	Dead	1	DS	1	W2	1		
ELU 0.9D	Dead	0.9	DS	0.9				
ELU 0.9D-1.0SX-0.3SY	Dead	0.9	DS	0.9	SX	-1	SY	-0.3
ELU 0.9D-1.0SX+0.3SY	Dead	0.9	DS	0.9	SX	-1	SY	0.3
ELU 0.9D-1.0SY-0.3SX	Dead	0.9	DS	0.9	SX	-0.3	SY	-1
ELU 0.9D-1.0SY+0.3SX	Dead	0.9	DS	0.9	SX	0.3	SY	-1
ELU 0.9D+1.0SX-0.3SY	Dead	0.9	DS	0.9	SX	1	SY	-0.3
ELU 0.9D+1.0SX+0.3SY	Dead	0.9	DS	0.9	SX	1	SY	0.3
ELU 0.9D+1.0SY-0.3SX	Dead	0.9	DS	0.9	SX	-0.3	SY	1
ELU 0.9D+1.0SY+0.3SX	Dead	0.9	DS	0.9	SX	0.3	SY	1
ELU 0.9D+1.6W1	Dead	0.9	DS	0.9	W1	1.6		
ELU 0.9D+1.6W2	Dead	0.9	DS	0.9	W2	1.6		
ELU 1.2D+0.8W1	Dead	1.2	DS	1.2	W1	0.8		
ELU 1.2D+0.8W2	Dead	1.2	DS	1.2	W2	0.8		
ELU 1.2D+1.0L-1.0SX-0.3SY	Dead	1.2	DS	1.2	Live	1	SX	-1
ELU 1.2D+1.0L-1.0SX-0.3SY							SY	-0.3
ELU 1.2D+1.0L-1.0SX+0.3SY	Dead	1.2	DS	1.2	Live	1	SX	-1
ELU 1.2D+1.0L-1.0SX+0.3SY							SY	0.3
ELU 1.2D+1.0L-1.0SY-0.3SX	Dead	1.2	DS	1.2	Live	1	SX	-0.3
ELU 1.2D+1.0L-1.0SY-0.3SX							SY	-1
ELU 1.2D+1.0L-1.0SY+0.3SX	Dead	1.2	DS	1.2	Live	1	SX	0.3
ELU 1.2D+1.0L-1.0SY+0.3SX							SY	-1
ELU 1.2D+1.0L+1.0SX-0.3SY	Dead	1.2	DS	1.2	Live	1	SX	1
ELU 1.2D+1.0L+1.0SX-0.3SY							SY	-0.3
ELU 1.2D+1.0L+1.0SX+0.3SY	Dead	1.2	DS	1.2	Live	1	SX	1
ELU 1.2D+1.0L+1.0SX+0.3SY							SY	0.3
ELU 1.2D+1.0L+1.0SY-0.3SX	Dead	1.2	DS	1.2	Live	1	SX	-0.3
ELU 1.2D+1.0L+1.0SY-0.3SX							SY	1
ELU 1.2D+1.0L+1.0SY+0.3SX	Dead	1.2	DS	1.2	Live	1	SX	0.3
ELU 1.2D+1.0L+1.0SY+0.3SX							SY	1
ELU 1.2D+1.6L	Dead	1.2	DS	1.2	Live	1.6		

Name	Load Name	SF	Load Name	SF	Load Name	SF	Load Name	SF
ELU 1.2D+1.6W1+1.0L	Dead	1.2	DS	1.2	Live	1	W1	1.6
ELU 1.2D+1.6W2+1.0L	Dead	1.2	DS	1.2	Live	1	W2	1.6
ELU 1.4D	Dead	1.4	DS	1.4				

MODELO ANÁLITICO

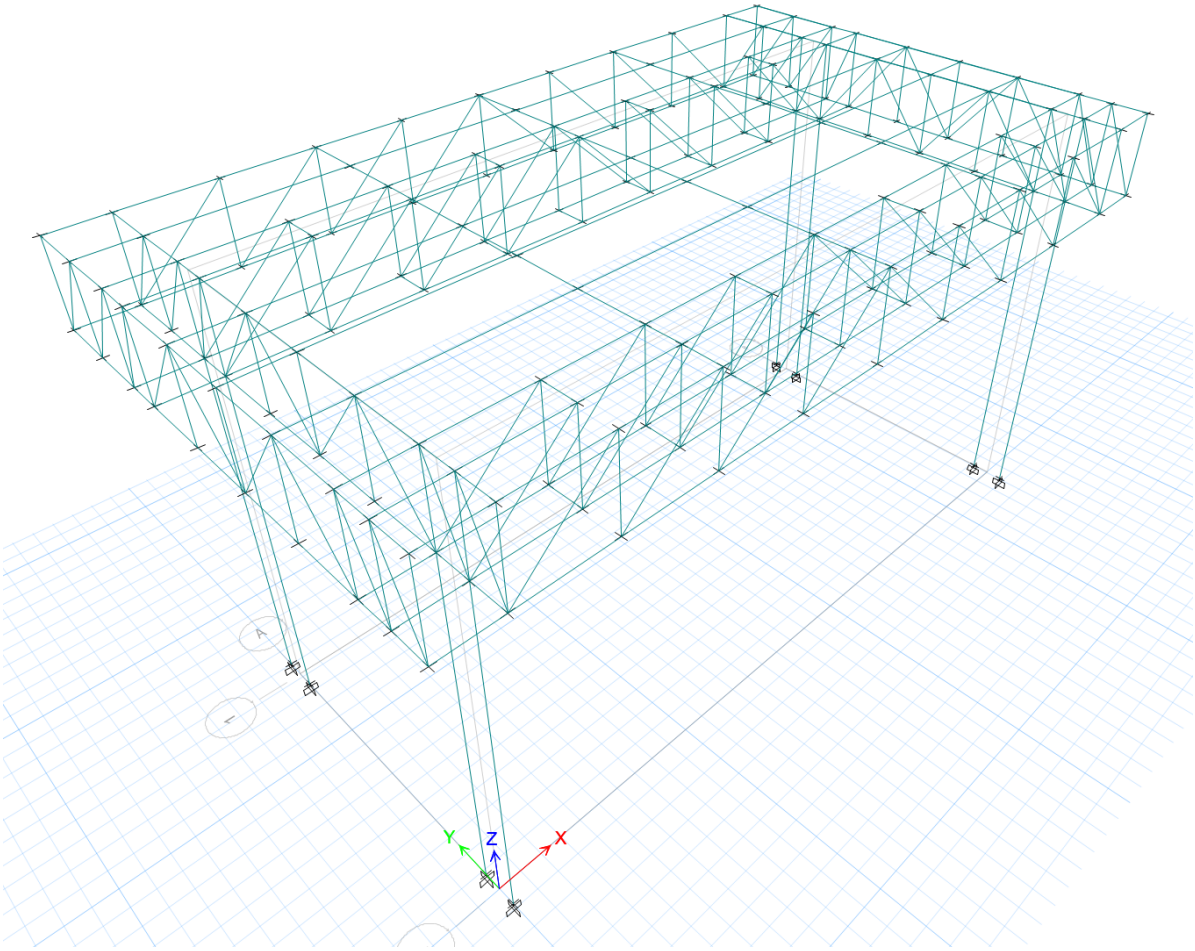

IMAGEN 1: Modelo tridimensional.

CARGAS INCLUIDAS EN EL MODELO

Story	Label	UniqueName	Load Pattern	Load Type	Direction	Distance Type	Absolute Distance B	Force A	Force B
							m	kgf/m	kgf/m
Story1	B225	395	L	Force	Gravity	Relative	0.65	40	40
Story1	B227	397	L	Force	Gravity	Relative	0.65	40	40
Story1	B228	398	L	Force	Gravity	Relative	0.65	40	40
Story1	B230	400	L	Force	Gravity	Relative	0.65	40	40
Story1	B231	401	L	Force	Gravity	Relative	0.65	40	40
Story1	B233	403	L	Force	Gravity	Relative	0.65	40	40
Story1	B234	404	L	Force	Gravity	Relative	0.65	40	40
Story1	B236	406	L	Force	Gravity	Relative	0.65	40	40
Story1	B237	407	L	Force	Gravity	Relative	2.1285	40	40
Story1	B238	408	L	Force	Gravity	Relative	2.1285	40	40
Story1	B239	409	L	Force	Gravity	Relative	2.1285	40	40
Story1	B240	410	L	Force	Gravity	Relative	2.1285	40	40
Story1	B241	411	L	Force	Gravity	Relative	2.1285	40	40
Story1	B242	412	L	Force	Gravity	Relative	2.1285	40	40
Story1	B243	413	L	Force	Gravity	Relative	2.1285	40	40
Story1	B244	414	L	Force	Gravity	Relative	2.1285	40	40
Story1	B245	415	L	Force	Gravity	Relative	2.1285	40	40
Story1	B246	416	L	Force	Gravity	Relative	2.1285	40	40
Story1	B247	417	L	Force	Gravity	Relative	2.1285	40	40
Story1	B248	418	L	Force	Gravity	Relative	2.1285	40	40
Story1	B249	419	L	Force	Gravity	Relative	2.1285	40	40
Story1	B250	420	L	Force	Gravity	Relative	2.1285	40	40
Story1	B251	421	L	Force	Gravity	Relative	2.1285	40	40
Story1	B252	422	L	Force	Gravity	Relative	2.1285	40	40
Story1	B225	395	DS	Force	Gravity	Relative	0.65	64	64
Story1	B227	397	DS	Force	Gravity	Relative	0.65	64	64
Story1	B228	398	DS	Force	Gravity	Relative	0.65	64	64
Story1	B230	400	DS	Force	Gravity	Relative	0.65	64	64
Story1	B231	401	DS	Force	Gravity	Relative	0.65	64	64
Story1	B233	403	DS	Force	Gravity	Relative	0.65	64	64
Story1	B234	404	DS	Force	Gravity	Relative	0.65	64	64

Story	Label	UniqueName	Load Pattern	Load Type	Direction	Distance Type	Absolute Distance B	Force A	Force B
							m	kgf/m	kgf/m
Story1	B236	406	DS	Force	Gravity	Relative	0.65	64	64
Story1	B237	407	DS	Force	Gravity	Relative	2.1285	64	64
Story1	B238	408	DS	Force	Gravity	Relative	2.1285	64	64
Story1	B239	409	DS	Force	Gravity	Relative	2.1285	64	64
Story1	B240	410	DS	Force	Gravity	Relative	2.1285	64	64
Story1	B241	411	DS	Force	Gravity	Relative	2.1285	64	64
Story1	B242	412	DS	Force	Gravity	Relative	2.1285	64	64
Story1	B243	413	DS	Force	Gravity	Relative	2.1285	64	64
Story1	B244	414	DS	Force	Gravity	Relative	2.1285	64	64
Story1	B245	415	DS	Force	Gravity	Relative	2.1285	64	64
Story1	B246	416	DS	Force	Gravity	Relative	2.1285	64	64
Story1	B247	417	DS	Force	Gravity	Relative	2.1285	64	64
Story1	B248	418	DS	Force	Gravity	Relative	2.1285	64	64
Story1	B249	419	DS	Force	Gravity	Relative	2.1285	64	64
Story1	B250	420	DS	Force	Gravity	Relative	2.1285	64	64
Story1	B251	421	DS	Force	Gravity	Relative	2.1285	64	64
Story1	B252	422	DS	Force	Gravity	Relative	2.1285	64	64
Story1	B225	395	W1	Force	Gravity	Relative	0.65	40	40
Story1	B227	397	W1	Force	Gravity	Relative	0.65	40	40
Story1	B228	398	W1	Force	Gravity	Relative	0.65	40	40
Story1	B230	400	W1	Force	Gravity	Relative	0.65	40	40
Story1	B231	401	W1	Force	Gravity	Relative	0.65	40	40
Story1	B233	403	W1	Force	Gravity	Relative	0.65	40	40
Story1	B234	404	W1	Force	Gravity	Relative	0.65	40	40
Story1	B236	406	W1	Force	Gravity	Relative	0.65	40	40
Story1	B237	407	W1	Force	Gravity	Relative	2.1285	40	40
Story1	B238	408	W1	Force	Gravity	Relative	2.1285	40	40
Story1	B239	409	W1	Force	Gravity	Relative	2.1285	40	40
Story1	B240	410	W1	Force	Gravity	Relative	2.1285	40	40
Story1	B241	411	W1	Force	Gravity	Relative	2.1285	40	40
Story1	B242	412	W1	Force	Gravity	Relative	2.1285	40	40
Story1	B243	413	W1	Force	Gravity	Relative	2.1285	40	40
Story1	B244	414	W1	Force	Gravity	Relative	2.1285	40	40

Story	Label	UniqueName	Load Pattern	Load Type	Direction	Distance Type	Absolute Distance B	Force A	Force B
							m	kgf/m	kgf/m
Story1	B245	415	W1	Force	Gravity	Relative	2.1285	40	40
Story1	B246	416	W1	Force	Gravity	Relative	2.1285	40	40
Story1	B247	417	W1	Force	Gravity	Relative	2.1285	40	40
Story1	B248	418	W1	Force	Gravity	Relative	2.1285	40	40
Story1	B249	419	W1	Force	Gravity	Relative	2.1285	40	40
Story1	B250	420	W1	Force	Gravity	Relative	2.1285	40	40
Story1	B251	421	W1	Force	Gravity	Relative	2.1285	40	40
Story1	B252	422	W1	Force	Gravity	Relative	2.1285	40	40
Story1	C13	21	W1	Force	Global-Y	Relative	1	150.26	150.26
Story1	C29	80	W1	Force	Global-Y	Relative	1	150.26	150.26
Story1	C70	283	W1	Force	Global-Y	Relative	1	150.26	150.26
Story1	C71	284	W1	Force	Global-Y	Relative	1	150.26	150.26
Story1	C72	285	W1	Force	Global-Y	Relative	1	150.26	150.26
Story1	C73	286	W1	Force	Global-Y	Relative	1	150.26	150.26
Story1	C74	287	W1	Force	Global-Y	Relative	1	150.26	150.26
Story1	C75	288	W1	Force	Global-Y	Relative	1	150.26	150.26
Story1	C76	289	W1	Force	Global-Y	Relative	1	150.26	150.26
Story1	C1	6	W1	Force	Global-Y	Relative	1	150.26	150.26
Story1	C9	345	W1	Force	Global-Y	Relative	1	150.26	150.26
Story1	B225	395	W2	Force	Gravity	Relative	0.65	-32	-32
Story1	B227	397	W2	Force	Gravity	Relative	0.65	-32	-32
Story1	B228	398	W2	Force	Gravity	Relative	0.65	-32	-32
Story1	B230	400	W2	Force	Gravity	Relative	0.65	-32	-32
Story1	B231	401	W2	Force	Gravity	Relative	0.65	-32	-32
Story1	B233	403	W2	Force	Gravity	Relative	0.65	-32	-32
Story1	B234	404	W2	Force	Gravity	Relative	0.65	-32	-32
Story1	B236	406	W2	Force	Gravity	Relative	0.65	-32	-32
Story1	B237	407	W2	Force	Gravity	Relative	2.1285	-32	-32
Story1	B238	408	W2	Force	Gravity	Relative	2.1285	-32	-32
Story1	B239	409	W2	Force	Gravity	Relative	2.1285	-32	-32
Story1	B240	410	W2	Force	Gravity	Relative	2.1285	-32	-32
Story1	B241	411	W2	Force	Gravity	Relative	2.1285	-32	-32
Story1	B242	412	W2	Force	Gravity	Relative	2.1285	-32	-32

Story	Label	UniqueName	Load Pattern	Load Type	Direction	Distance Type	Absolute Distance B	Force A	Force B
							m	kgf/m	kgf/m
Story1	B243	413	W2	Force	Gravity	Relative	2.1285	-32	-32
Story1	B244	414	W2	Force	Gravity	Relative	2.1285	-32	-32
Story1	B245	415	W2	Force	Gravity	Relative	2.1285	-32	-32
Story1	B246	416	W2	Force	Gravity	Relative	2.1285	-32	-32
Story1	B247	417	W2	Force	Gravity	Relative	2.1285	-32	-32
Story1	B248	418	W2	Force	Gravity	Relative	2.1285	-32	-32
Story1	B249	419	W2	Force	Gravity	Relative	2.1285	-32	-32
Story1	B250	420	W2	Force	Gravity	Relative	2.1285	-32	-32
Story1	B251	421	W2	Force	Gravity	Relative	2.1285	-32	-32
Story1	B252	422	W2	Force	Gravity	Relative	2.1285	-32	-32
Story1	C14	22	W2	Force	Global-Y	Relative	1	114.3	114.3
Story1	C30	81	W2	Force	Global-Y	Relative	1	114.3	114.3
Story1	C63	252	W2	Force	Global-Y	Relative	1	114.3	114.3
Story1	C64	253	W2	Force	Global-Y	Relative	1	114.3	114.3
Story1	C65	254	W2	Force	Global-Y	Relative	1	114.3	114.3
Story1	C66	255	W2	Force	Global-Y	Relative	1	114.3	114.3
Story1	C67	256	W2	Force	Global-Y	Relative	1	114.3	114.3
Story1	C68	257	W2	Force	Global-Y	Relative	1	114.3	114.3
Story1	C69	258	W2	Force	Global-Y	Relative	1	114.3	114.3
Story1	C2	10	W2	Force	Global-Y	Relative	1	114.3	114.3
Story1	C10	346	W2	Force	Global-Y	Relative	1	114.3	114.3

ANÁLISIS SÍSMICO

Del programa de análisis estructural se obtienen los valores de cortante basal en las direcciones X y Y, además del valor de masa participante en el sísmo.

Output Case	Case Type	Step Type	FX	FY	FZ
			tonf	tonf	tonf
Dead	LinStatic		0	0	3.19
Live	LinStatic		0	0	1.57
SX	LinRespSpec	Max	3.84	7.00E-02	0
SY	LinRespSpec	Max	7.00E-02	3.92	0
SXEST	LinStatic		-3.93	0	0
SYEST	LinStatic		0.00E+00	-3.93	0
DS	LinStatic		0	0	2.51
W1	LinStatic		0	-1.65	1.57
W2	LinStatic		0	-1.26	-1.26

PESO DE LA ESTRUCTURA:	5.70 Ton	Sa:	0.703125
Vs Estático:	4.01 Ton	Vs Dinámico:	3.61
CORTANTE SÍSMICO:	3.93 Ton	Factor de corrección:	1.02
CORTANTE DINÁMICO X:	3.84 Ton	Factor de corrección:	N/A
CORTANTE DINÁMICO Y:	3.92 Ton	Factor de corrección:	N/A

Verificación de fuerza sísmica en la base

Aplicados los factores de corrección obtenemos la fuerza sísmica corregida en la base.

Output Case	Case Type	Step Type	FX	FY
			tonf	tonf
SX	LinRespSpec	Max	3.61	0.07
SY	LinRespSpec	Max	0.07	3.61
SXEST	LinStatic		-4.01	0
SYEST	LinStatic		0	-4.01

Porcentaje de participación de masas

Número De Modos De Vibración: Deben incluirse en el análisis dinámico todos los modos de vibración que contribuyan de una manera significativa a la respuesta dinámica de la estructura. Se considera que se ha cumplido este requisito cuando se demuestra que, con el número de modos empleados, p, se ha

incluido en el cálculo de la respuesta, de cada una de las direcciones horizontales de análisis, j, por lo menos el 90% de la masa participante de la estructura. La masa participante, Mj, en cada una de las direcciones de análisis, j, para el número de modos empleados, p.

Para nuestro caso se alcanzó el 90% de aportes de masa en el modo 2 en X y en el modo 2 en Y.

Case	Mode	Period	UX	UY	UZ	SumUX	SumUY
		sec					
Modal	1	0.487	0.7791	0.1985	0	0.7791	0.1985
Modal	2	0.486	0.1963	0.7995	0	0.9754	0.998
Modal	3	0.354	0.0245	0.0003	0	0.9999	0.9983
Modal	4	0.103	0.0001	0	0	0.9999	0.9983
Modal	5	0.092	0	0.0017	0	0.9999	1
Modal	6	0.061	0	0	0	0.9999	1
Modal	7	0.048	0	2.20E-05	0	0.9999	1
Modal	8	0.045	3.50E-05	0	0	1	1

Verificación valor periodo de vibración	
H=	5.15 m
Ta=	0.267
Cu=	1.412
Cu*Ta=	0.377
T=	0.486
T<CuTa	NO CUMPLE

Se verifica el valor de Sa para el periodo de vibración más significativo en la tabla de participación de masa, donde se comprueba que la aceleración no cambia para el periodo significativo.

VERIFICACIÓN DE REQUISITOS ESPECIALES ACORDE AL CAPITULO A.12 NSR-10

UMBRAL DE DAÑO					
UBICACIÓN	Curumani - Cesar				
DATOS					
GRUPO DE USO	III	**COEFICIENTE DE IMPORTANCIA**			1.25
PERFIL DE SUELO	D	**Fa**	1.5	**Fv**	2.4
AaFaI	0.075	**Ad**	0.04	**S**	3
Sa	0.1875				

T (s)	**Sad (g)**
0	0.040
0.25	0.120
1.5	0.120
1.6	0.113
2	0.090
2.5	0.072
3	0.060
3.5	0.051
4	0.045
4.5	0.040
5	0.036
5.5	0.033
6	0.030
6.5	0.028
7.2	0.025

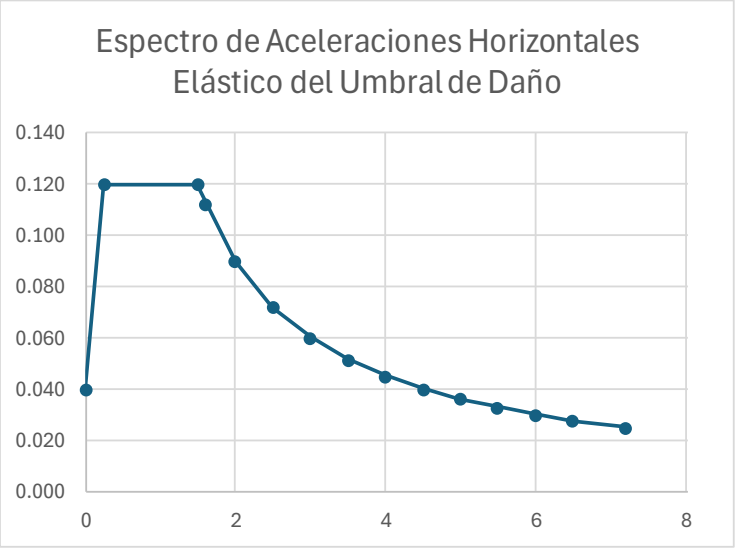

Output Case	Case Type	Step Type	FX	FY	FZ
			tonf	tonf	tonf
Dead	LinStatic		0	0	3.19
Live	LinStatic		0	0	1.57
SX-UMBRAL	LinRespSpec	Max	0.66	0.01	0
SY-UMBRAL	LinRespSpec	Max	0.01	0.67	0
SXEST-UMBRAL	LinStatic		-0.67	0	0
SYEST-UMBRAL	LinStatic		0	-0.67	0
DS	LinStatic		0	0	2.51
W1	LinStatic		0	0	1.57
W2	LinStatic		0	0	-1.26

PESO DE LA ESTRUCTURA:	5.70 Ton	Sa:	0.12
Vs Estático:	0.68 Ton	Vs Dinámico:	0.62
CORTANTE SÍSMICO:	0.67 Ton	Factor de corrección:	1.02
CORTANTE DINÁMICO X:	0.66 Ton	Factor de corrección:	N/A
CORTANTE DINÁMICO Y:	0.67 Ton	Factor de corrección:	N/A

Aplicados los factores de corrección obtenemos:

Output Case	Case Type	Step Type	FX	FY
			tonf	tonf
SX-UMBRAL	LinRespSpec	Max	0.61	0.01
SY-UMBRAL	LinRespSpec	Max	0.01	0.62
SX-UMBRAL-EST	LinStatic		-0.69	0
SY-UMBRAL-EST	LinStatic		0	-0.69

DERIVAS POR UMBRAL DE DAÑO

Story	Output Case	Case Type	Step Type	Direction	Drift	Verificación	
Story1	SX	LinRespSpec	Max	X	0.79%	<1.0%	OK
Story1	SX	LinRespSpec	Max	Y	0.15%	<1.0%	OK
Story1	SY	LinRespSpec	Max	Y	0.72%	<1.0%	OK
Story1	SXEST	LinStatic		X	0.84%	<1.0%	OK
Story1	SYEST	LinStatic		Y	0.79%	<1.0%	OK
Story1	SX-UMBRAL	LinRespSpec	Max	X	0.13%	<0.4%	OK
Story1	SX-UMBRAL	LinRespSpec	Max	Y	0.03%	<0.4%	OK
Story1	SY-UMBRAL	LinRespSpec	Max	Y	0.12%	<0.4%	OK
Story1	SX-UMBRAL-EST	LinStatic		X	0.14%	<0.4%	OK
Story1	SY-UMBRAL-EST	LinStatic		Y	0.14%	<0.4%	OK

ANÁLISIS DE IRREGULARIDADES

Irregularidades en planta

Tipo 1aP y 1Bp

IRREGULARIDAD TORSIONAL - TIPO 1aP	IRREGULARIDAD TORSIONAL EXTREMA - TIPO 1bP
$\phi p = 0.90$	$\phi p = 0.80$
$1.4\left(\frac{\Delta 1+\Delta 2}{2}\right) \geq \Delta 1 > 1.2\left(\frac{\Delta 1+\Delta 2}{2}\right)$	$\Delta 1 > 1.4\left(\frac{\Delta 1+\Delta 2}{2}\right)$

SISMO X					Tipo 1aP	Tipo 1bP
PISO 1	Δ1	44.52 mm	1.4((Δ1+Δ2)/2)	58.02 mm	OK	OK
	Δ2	38.36 mm	1.2((Δ1+Δ2)/2)	49.73 mm		

IRREGULARIDAD TORSIONAL - TIPO 1aP	IRREGULARIDAD TORSIONAL EXTREMA - TIPO 1bP
$\phi p = 0.90$	$\phi p = 0.80$
$1.4\left(\frac{\Delta 1+\Delta 2}{2}\right) \geq \Delta 1 > 1.2\left(\frac{\Delta 1+\Delta 2}{2}\right)$	$\Delta 1 > 1.4\left(\frac{\Delta 1+\Delta 2}{2}\right)$

SISMO Y					Tipo 1aP	Tipo 1bP
PISO 1	Δ1	40.63 mm	1.4((Δ1+Δ2)/2)	56.04 mm	OK	OK
	Δ2	39.42 mm	1.2((Δ1+Δ2)/2)	48.03 mm		

Tipo 2P

	RETROCESO EN LAS ESQUINAS - TIPO 2P		
	Φp=0.90		
NO APLICA	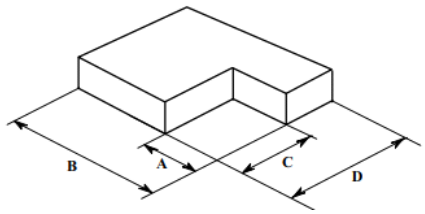		
	DATOS DE ENTRADA		
	A=	0 mm	STORY1
	B=	0 mm	
	C=	0 mm	
	D=	0 mm	
	A>0.15B	NO CUMPLE OP=1,0	
	C>0.15D	NO CUMPLE OP=1,0	

Tipo 3P

NO APLICA	IRREGULARIDAD DEL DIAFRAGMA - TIPO 3P				NO APLICA	IRREGULARIDAD DEL DIAFRAGMA - TIPO 3P			
	Φp=0.90					Φp=0.90			
	1) $C \times D > 0.5\,A \times B$					2) $(C \times D + C \times E) > 0.5\,A \times B$			
	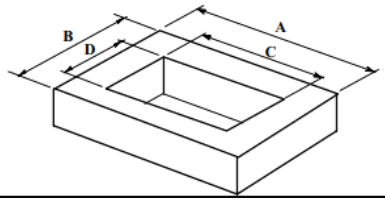					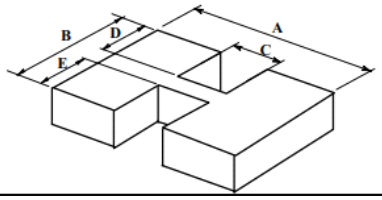			
	DATOS DE ENTRADA					DATOS DE ENTRADA			
	A=	0	mm	STORY1		A=	0	mm	STORY1
	B=	0	mm			B=	0	mm	
	C=	0	mm			C=	0	mm	
	D=	0	mm			D=	0	mm	
						E=	0	mm	
	C*D=	0	0.5A*B=	0					
	iNO CUMPLE! OP=1.00					(C*D+C*E)=	0	0.5A*B=	0

Tipo 4P

Tipo 4P — Desplazamiento de los planos de Acción — $\phi_p = 0.8$

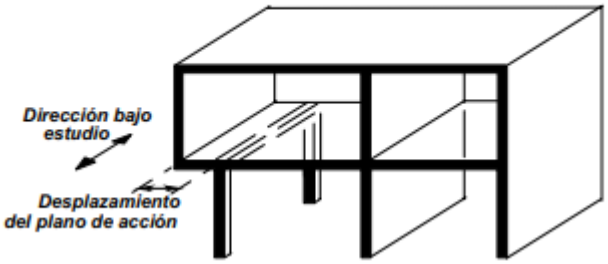

No aplica

Irregularidades en altura

Tipo 1aA y 1bA

Tipo 1aA — Piso flexible $\phi_a = 0.9$ 0.60 Rigidez $K_D \leq$ Rigidez $K_C < 0.70$ Rigidez K_D o $0.70\ (K_D+K_E+K_F)/3 \leq$ Rigidez $K_C < 0.80\ (K_D+K_E+K_F)/3$	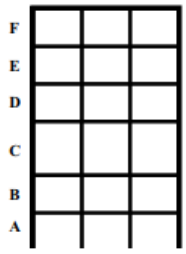
Tipo 1bA — Piso flexible extremo $\phi_a = 0.8$ Rigidez $K_C < 0.60$ Rigidez K_D o Rigidez $K_C < 0.70\ (K_D+K_E+K_F)/3$	

No aplica.

Tipo 2A

Tipo 2A — Distribución masa — $\phi_a = 0.9$

$m_D > 1.50\ m_E$

o

$m_D > 1.50\ m_C$

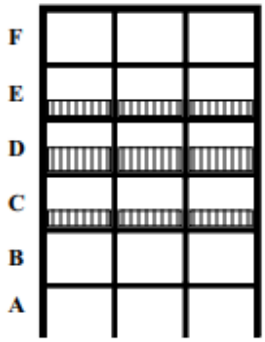

No aplica.

Tipo 3A

Tipo 3A — Geométrica — $\phi_a = 0.9$

$a > 1.30\ b$

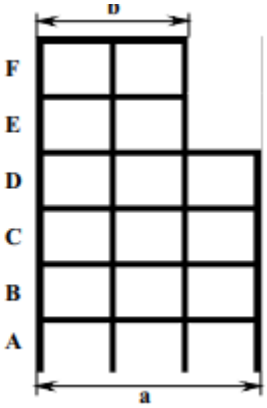

No Aplica

Tipo 4A

Tipo 4A — Desplazamiento dentro del plano de acción — $\phi_a = 0.8$

b > a

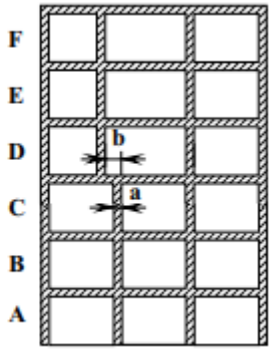

No aplica.

Tipo 5aA – Tipo 5bA

Tipo 5aA — Piso débil
$\phi_a = 0.9$

0.65 Resist. Piso C ≤ Resist. Piso B < 0.80 Resist. Piso C

Tipo 5bA — Piso débil extremo
$\phi_a = 0.8$

Resistencia Piso B < 0.65 Resistencia Piso C

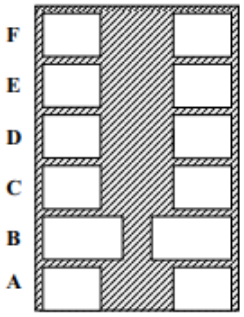

No aplica

Ausencia de redundancia

Acorde a lo mencionado en el articulo A.3.3.8 de la norma NSR-10, se evalua que el factor de reducción por ausencia de redundancia será:

$$\emptyset rx = 0.75$$
$$\emptyset ry = 0.75$$

En conclusión, los factores de reducción de sismo quedan asi:

$$\emptyset a = 1.0$$
$$\emptyset px = 1.0$$
$$\emptyset py = 1.0$$
$$\emptyset rx = 0.75$$
$$\emptyset ry = 0.75$$

VERIFICACIÓN DE DEFLEXIONES

TABLA C.9.5(b) — Deflexión máxima admisible calculada

Tipo de elemento	Deflexión considerada	Límite de deflexión
Cubiertas planas que no soporten ni estén ligadas a elementos no estructurales susceptibles de sufrir daños debido a deflexiones grandes.	Deflexión inmediata debida a la carga viva, **L**	$\ell/180$ *
Entrepisos que no soporten ni estén ligados a elementos no estructurales susceptibles de sufrir daños debido a deflexiones grandes.	Deflexión inmediata debida a la carga viva, **L**	$\ell/360$
Sistema de entrepiso o cubierta que soporte o esté ligado a elementos no estructurales susceptibles de sufrir daños debido a deflexiones grandes.	La parte de la deflexión total que ocurre después de la unión de los elementos no estructurales (la suma de la deflexión a largo plazo debida a todas las cargas permanentes, y la deflexión inmediata debida a cualquier carga viva adicional)†	$\ell/480$ ‡
Sistema de entrepiso o cubierta que soporte o esté ligado a elementos no estructurales no susceptibles de sufrir daños debido a deflexiones grandes.		$\ell/240$§

$$\frac{l}{180} = \frac{8510mm}{180} = 42.27mm$$

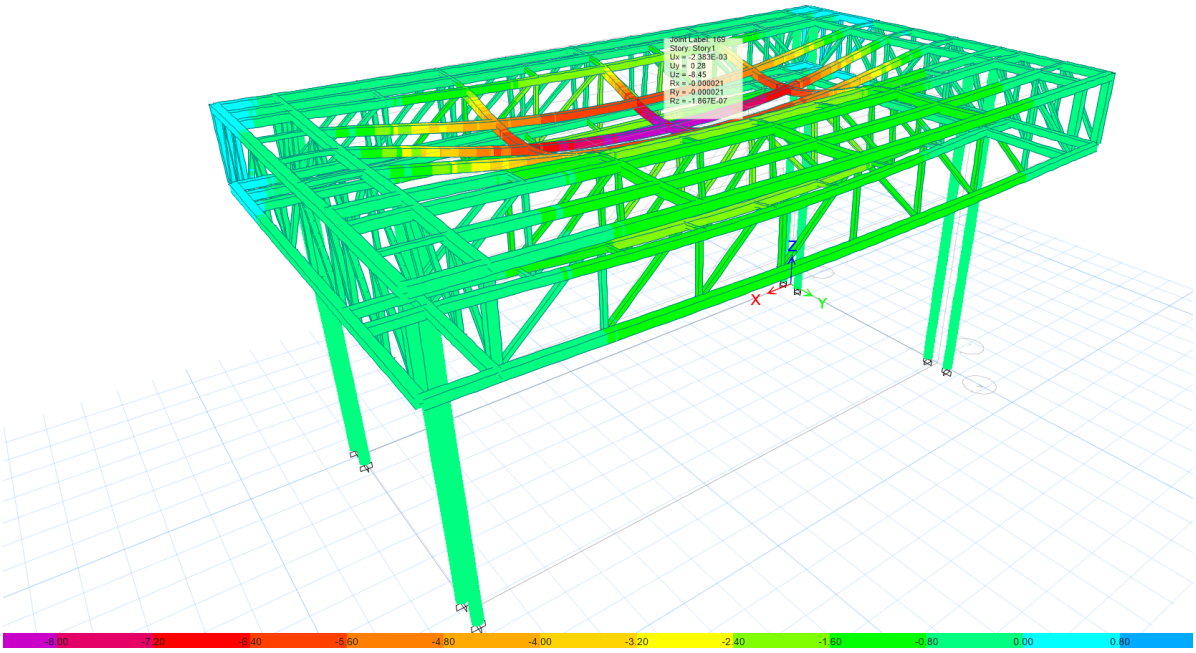

Deflexión máxima por carga viva más carga muerta: -8.45 mm

DISEÑO DE ELEMENTOS ESTRUCTURALES

Verificados los chequeos de deflexiones y análisis, procedemos a reducir el sismo de acuerdo con el capitulo A3 de la norma NSR-10.

Acorde a lo mencionado en la descripción de la estructura y análisis de irregularidades,

$$\mathrm{Ro} = 1.50$$

$$\emptyset a = 1.0$$

$$\emptyset px = 1.0$$

$$\emptyset py = 1.0$$

$$\emptyset rx = 0.75$$

$$\emptyset ry = 0.75$$

$$Rx = Ro * \emptyset a * \emptyset p * \emptyset rx = 1.125$$

$$Ry = Ro * \emptyset a * \emptyset p * \emptyset ry = 1.125$$

Aplicados los valores de reducción en el sísmo procedemos a diseñar.

Diseño de elementos en concreto reforzado

Se aporta anexo donde se verifica el diseño estructural de los elementos tipo viga y pedestales.

Diseño de elementos metálicos en cubierta

Se aporta anexo donde se verifica el diseño estructural de los elementos tipo correa.

Diseño de elementos de cubierta

Story	Design Type	Design Section	PMM Combo	PMM Ratio	P Ratio	M Major Ratio	M Minor Ratio	V Major Ratio	V Minor Ratio
Story1	Column	TUBC 152.4X4MM	ELU 1.2D+1.0L-1.0SY-0.3SX(C)	0.366	0.016	0.1	0.336	0.033	0.025
Story1	Column	TUBC 152.4X4MM	ELU 1.2D+1.0L-1.0SY-0.3SX(T)	0.106	0.004	0.01	0.102		
Story1	Column	TUBC 152.4X4MM	ELU 1.2D+1.0L-1.0SX-0.3SY(C)	0.41	0.025	0.35	0.16	0.036	0.026
Story1	Column	TUBC 152.4X4MM	ELU 1.2D+1.0L-1.0SY-0.3SX(C)	0.377	0.027	0.097	0.336	0.029	0.025
Story1	Column	TUBC 152.4X4MM	ELU 1.2D+1.0L-1.0SY-0.3SX(T)	0.259	0.003	0.004	0.255		
Story1	Column	TUBC 152.4X4MM	ELU 1.2D+1.0L-1.0SX-0.3SY(C)	0.402	0.022	0.344	0.161	0.035	0.026
Story1	Column	TUBC 152.4X4MM	ELU 1.2D+1.0L-1.0SX-0.3SY(T)	0.017	0.000108	0.01	0.013		
Story1	Column	TUB100X100X3	ELU 1.2D+1.6W1+1.0L(C)	0.057	0.002	0.008	0.047	0.007	0.018
Story1	Column	TUB100X100X3	ELU 1.2D+1.6W1+1.0L(T)	0.047	0.001	0.037	0.009		

Story	Design Type	Design Section	PMM Combo	PMM Ratio	P Ratio	M Major Ratio	M Minor Ratio	V Major Ratio	V Minor Ratio
Story1	Column	TUB100X100X3	ELU 1.2D+1.0L-1.0SX-0.3SY(C)	0.045	0.001	0.033	0.011	0.007	0.011
Story1	Column	TUB100X100X3	ELU 1.2D+1.0L-1.0SX-0.3SY(T)	0.032	0.0003038	0.023	0.009		
Story1	Column	TUBC 152.4X4MM	ELU 1.2D+1.0L-1.0SY-0.3SX(C)	0.351	0.015	0.098	0.322	0.022	0.024
Story1	Column	TUBC 152.4X4MM	ELU 0.9D-1.0SX-0.3SY(C)	0.166	0.003	0.152	0.057	0.033	0.024
Story1	Column	TUBC 152.4X4MM	ELU 0.9D-1.0SX-0.3SY(T)	0.167	0.003	0.152	0.061		
Story1	Column	TUBC 152.4X4MM	ELU 1.2D+1.0L-1.0SX-0.3SY(C)	0.408	0.024	0.35	0.158	0.026	0.024
Story1	Column	TUBC 152.4X4MM	ELU 1.2D+1.0L-1.0SX-0.3SY(C)	0.195	0.007	0.18	0.053	0.036	0.024
Story1	Column	TUBC 152.4X4MM	ELU 1.2D+1.0L-1.0SY-0.3SX(C)	0.361	0.026	0.096	0.322	0.021	0.024
Story1	Column	TUBC 152.4X4MM	ELU 1.2D+1.0L-1.0SY-0.3SX(T)	0.259	0.004	0.004	0.255		
Story1	Column	TUBC 152.4X4MM	ELU 1.2D+1.0L-1.0SX-0.3SY(C)	0.159	0.004	0.143	0.059	0.029	0.024
Story1	Column	TUBC 152.4X4MM	ELU 1.2D+1.0L-1.0SX-0.3SY(C)	0.4	0.021	0.344	0.159	0.025	0.024
Story1	Column	TUBC 152.4X4MM	ELU 0.9D-1.0SX-0.3SY(C)	0.189	0.002	0.178	0.058	0.036	0.024
Story1	Column	TUBC 152.4X4MM	ELU 0.9D-1.0SX-0.3SY(T)	0.193	0.002	0.18	0.062		
Story1	Column	TUB50X50X2	ELU 1.2D+1.0L-1.0SX-0.3SY(C)	0.092	0.027	0.04	0.025	0.004	0.003
Story1	Column	TUB50X50X2	ELU 1.2D+1.0L-1.0SX-0.3SY(T)	0.01	0.001	0.006	0.004		
Story1	Column	TUB50X50X2	ELU 1.2D+1.0L-1.0SY-0.3SX(C)	0.107	0.013	0.059	0.034	0.008	0.006
Story1	Column	TUB50X50X2	ELU 1.2D+1.0L-1.0SY-0.3SX(T)	0.095	0.007	0.086	0.002		
Story1	Column	TUB50X50X2	ELU 1.2D+1.6W1+1.0L(C)	0.155	0.022	0.115	0.017	0.011	0.004
Story1	Column	TUB50X50X2	ELU 1.2D+1.6W1+1.0L(C)	0.135	0.012	0.083	0.04	0.008	0.006
Story1	Column	TUB100X100X3	ELU 1.2D+1.6W1+1.0L(C)	0.057	0.002	0.008	0.047	0.007	0.018
Story1	Column	TUB100X100X3	ELU 1.2D+1.6W1+1.0L(T)	0.048	0.001	0.038	0.009		
Story1	Column	TUB100X100X3	ELU 1.2D+1.0L-1.0SX-0.3SY(C)	0.046	0.001	0.033	0.012	0.007	0.011
Story1	Column	TUB100X100X3	ELU 1.2D+1.0L-1.0SX-0.3SY(T)	0.033	0	0.023	0.01		
Story1	Column	TUB50X50X2	ELU 1.2D+1.0L-1.0SX-0.3SY(C)	0.088	0.026	0.037	0.025	0.004	0.003

Story	Design Type	Design Section	PMM Combo	PMM Ratio	P Ratio	M Major Ratio	M Minor Ratio	V Major Ratio	V Minor Ratio
Story1	Column	TUB50X50X2	ELU 1.2D+1.0L-1.0SX-0.3SY(T)	0.01	0.001	0.005	0.004		
Story1	Column	TUB50X50X2	ELU 1.2D+1.0L-1.0SY-0.3SX(C)	0.098	0.014	0.051	0.033	0.007	0.006
Story1	Column	TUB50X50X2	ELU 1.2D+1.0L-1.0SY-0.3SX(T)	0.082	0.007	0.073	0.002		
Story1	Column	TUB50X50X2	ELU 1.2D+1.6W1+1.0L(C)	0.135	0.021	0.096	0.018	0.009	0.004
Story1	Column	TUB50X50X2	ELU 1.2D+1.6W1+1.0L(C)	0.119	0.012	0.07	0.036	0.007	0.006
Story1	Column	TUB50X50X2	(T)	0.087	0.003	0.002	0.081	0.001	0.009
Story1	Column	TUB50X50X2	(T)	0.065	0.016	0.04	0.01	0.004	0.001
Story1	Column	TUB50X50X2	(T)	0.092	0.021	0.014	0.056	0.002	0.007
Story1	Column	TUB50X50X2	(T)	0.07	0.016	0.013	0.041	0.002	0.005
Story1	Column	TUB50X50X2	(T)	0.069	0.016	0.013	0.04	0.002	0.005
Story1	Column	TUB50X50X2	(T)	0.091	0.021	0.015	0.055	0.002	0.007
Story1	Column	TUB50X50X2	(T)	0.064	0.016	0.04	0.009	0.004	0.001
Story1	Column	TUB50X50X2	ELU 1.2D+1.6W1+1.0L(C)	0.211	0.005	0.0001699	0.206	0.001	0.022
Story1	Column	TUB50X50X2	(T)	0.128	0.034	0.03	0.064	0.006	0.007
Story1	Column	TUB50X50X2	(T)	0.219	0.014	0.027	0.178	0.004	0.019
Story1	Column	TUB50X50X2	(T)	0.13	0.012	0.009	0.109	0.002	0.011
Story1	Column	TUB50X50X2	(T)	0.129	0.012	0.009	0.107	0.002	0.011
Story1	Column	TUB50X50X2	(T)	0.216	0.014	0.027	0.174	0.004	0.019
Story1	Column	TUB50X50X2	(T)	0.125	0.034	0.029	0.062	0.006	0.007
Story1	Column	TUB50X50X2	ELU 1.2D+1.0L-1.0SY-0.3SX(C)	0.15	0.004	0.002	0.143	0.001	0.016
Story1	Column	TUB50X50X2	ELU 1.2D+1.0L-1.0SY-0.3SX(T)	0.01	0.0004009	0	0.009		
Story1	Column	TUB50X50X2	(T)	0.111	0.033	0.036	0.042	0.005	0.006
Story1	Column	TUB50X50X2	(T)	0.166	0.015	0.021	0.131	0.004	0.015
Story1	Column	TUB50X50X2	(T)	0.099	0.011	0.009	0.079	0.002	0.009

Story	Design Type	Design Section	PMM Combo	PMM Ratio	P Ratio	M Major Ratio	M Minor Ratio	V Major Ratio	V Minor Ratio
Story1	Column	TUB50X50X2	(T)	0.099	0.012	0.009	0.078	0.002	0.008
Story1	Column	TUB50X50X2	(T)	0.164	0.015	0.021	0.128	0.004	0.014
Story1	Column	TUB50X50X2	(T)	0.109	0.032	0.035	0.042	0.005	0.006
Story1	Column	TUB50X50X2	(T)	0.051	0.005	0	0.046	0.001	0.004
Story1	Column	TUB50X50X2	ELU 1.2D+1.6W1+1.0L(C)	0.03	0.002	0.0004169	0.028	0.003	0.002
Story1	Column	TUB50X50X2	ELU 1.2D+1.6W1+1.0L(T)	0.051	0.007	0.025	0.019		
Story1	Column	TUB50X50X2	(T)	0.046	0.011	0.005	0.03	0.001	0.003
Story1	Column	TUB50X50X2	ELU 0.9D+1.6W1(C)	0.023	0.0003799	0.0004665	0.022	0.001	0.003
Story1	Column	TUB50X50X2	ELU 0.9D+1.6W1(T)	0.038	0.01	0.008	0.02		
Story1	Column	TUB50X50X2	ELU 0.9D+1.6W1(C)	0.023	0.0004685	0.001	0.022	0.001	0.003
Story1	Column	TUB50X50X2	ELU 0.9D+1.6W1(T)	0.038	0.01	0.008	0.02		
Story1	Column	TUB50X50X2	(T)	0.045	0.01	0.005	0.03	0.001	0.003
Story1	Column	TUB50X50X2	ELU 1.2D+1.6W1+1.0L(C)	0.03	0.002	0.0003717	0.028	0.002	0.002
Story1	Column	TUB50X50X2	ELU 1.2D+1.6W1+1.0L(T)	0.051	0.007	0.025	0.02		
Story1	Column	TUB50X50X2	(T)	0.2	0.001	0	0.2	0.000239	0.043
Story1	Column	TUB50X50X2	ELU 0.9D+1.6W2(C)	0.062	0	0.0001102	0.062	0.002	0.025
Story1	Column	TUB50X50X2	ELU 0.9D+1.6W2(T)	0.07	0.004	0.004	0.062		
Story1	Column	TUB50X50X2	(T)	0.143	0.0004843	0.001	0.141	0.001	0.035
Story1	Column	TUB50X50X2	ELU 0.9D+1.6W2(C)	0.137	0.001	0.0002254	0.136	0.001	0.035
Story1	Column	TUB50X50X2	ELU 0.9D+1.6W2(T)	0.135	0.001	0.001	0.134		
Story1	Column	TUB50X50X2	ELU 0.9D+1.6W2(C)	0.137	0.001	0.0001336	0.136	0.001	0.035
Story1	Column	TUB50X50X2	ELU 0.9D+1.6W2(T)	0.136	0.001	0.001	0.134		
Story1	Column	TUB50X50X2	(T)	0.143	0.001	0.001	0.141	0.001	0.035
Story1	Column	TUB50X50X2	(T)	0.069	0.004	0.004	0.061	0.002	0.025

Story	Design Type	Design Section	PMM Combo	PMM Ratio	P Ratio	M Major Ratio	M Minor Ratio	V Major Ratio	V Minor Ratio
Story1	Column	TUB50X50X2	(T)	0.218	0.0004015	0	0.217	0.0003615	0.054
Story1	Column	TUB50X50X2	(T)	0.11	0.01	0.01	0.089	0.001	0.034
Story1	Column	TUB50X50X2	(T)	0.158	0.006	0.005	0.147	0.001	0.043
Story1	Column	TUB50X50X2	(T)	0.16	0.004	0.003	0.153	0.001	0.045
Story1	Column	TUB50X50X2	(T)	0.16	0.005	0.003	0.153	0.001	0.045
Story1	Column	TUB50X50X2	(T)	0.159	0.006	0.005	0.147	0.001	0.043
Story1	Column	TUB50X50X2	(T)	0.109	0.01	0.01	0.089	0.001	0.034
Story1	Column	TUB100X100X3	ELU 1.2D+1.0L-1.0SX-0.3SY(C)	0.037	0.002	0.026	0.01	0.007	0.012
Story1	Column	TUB100X100X3	ELU 1.2D+1.0L-1.0SX-0.3SY(T)	0.004	0.000234	0.001	0.002		
Story1	Column	TUB100X100X3	ELU 1.2D+1.0L-1.0SX-0.3SY(C)	0.035	0.001	0.026	0.008	0.006	0.008
Story1	Column	TUB100X100X3	ELU 1.2D+1.0L-1.0SX-0.3SY(T)	0.005	0	0.002	0.002		
Story1	Column	TUB50X50X2	ELU 1.2D+1.0L-1.0SY-0.3SX(C)	0.03	0.03	0	0	0.001	0.001
Story1	Column	TUB50X50X2	(T)	0.021	0.001	0.011	0.009	0.001	0.001
Story1	Column	TUB50X50X2	ELU 0.9D-1.0SX-0.3SY(C)	0.019	0.0001133	0.014	0.005	0.001	0.001
Story1	Column	TUB50X50X2	ELU 0.9D-1.0SX-0.3SY(T)	0.02	0.0001422	0.014	0.005		
Story1	Column	TUB50X50X2	ELU 1.2D+1.6W1+1.0L(C)	0.023	0.001	0.014	0.008	0.002	0.001
Story1	Column	TUB50X50X2	ELU 1.2D+1.6W1+1.0L(T)	0.028	0.001	0.017	0.01		
Story1	Column	TUB100X100X3	ELU 1.2D+1.0L-1.0SX-0.3SY(C)	0.037	0.002	0.026	0.01	0.007	0.012
Story1	Column	TUB100X100X3	ELU 1.2D+1.0L-1.0SX-0.3SY(T)	0.004	0.0002418	0.002	0.002		
Story1	Column	TUB100X100X3	ELU 1.2D+1.0L-1.0SX-0.3SY(C)	0.035	0.001	0.025	0.008	0.006	0.008
Story1	Column	TUB100X100X3	ELU 1.2D+1.0L-1.0SX-0.3SY(T)	0.01	0	0.001	0.009		
Story1	Column	TUB50X50X2	ELU 1.2D+1.0L-1.0SX-0.3SY(C)	0.032	0.011	0.013	0.008	0.001	0.001
Story1	Column	TUB50X50X2	(T)	0.023	0.001	0.013	0.009	0.002	0.001
Story1	Column	TUB50X50X2	ELU 1.2D+1.0L-1.0SX-0.3SY(C)	0.021	0.001	0.014	0.006	0.001	0.001

Story	Design Type	Design Section	PMM Combo	PMM Ratio	P Ratio	M Major Ratio	M Minor Ratio	V Major Ratio	V Minor Ratio
Story1	Column	TUB50X50X2	ELU 1.2D+1.6W1+1.0L(C)	0.025	0.001	0.016	0.008	0.002	0.001
Story1	Column	TUB50X50X2	ELU 1.2D+1.6W1+1.0L(T)	0.031	0.001	0.019	0.011		
Story1	Column	TUB50X50X2	ELU 1.2D+1.0L-1.0SX-0.3SY(C)	0.039	0.012	0.021	0.006	0.002	0.001
Story1	Column	TUB50X50X2	ELU 1.2D+1.0L-1.0SX-0.3SY(T)	0.012	0.0003952	0.008	0.003		
Story1	Column	TUB50X50X2	ELU 1.2D+1.0L-1.0SX-0.3SY(C)	0.046	0.012	0.03	0.005	0.004	0.001
Story1	Column	TUB50X50X2	ELU 1.2D+1.0L-1.0SX-0.3SY(T)	0.01	0.0004139	0.007	0.003		
Story1	Column	TUB50X50X2	(T)	0.052	0.01	0.039	0.004	0.006	0.001
Story1	Column	TUB50X50X2	ELU 1.2D+1.0L-1.0SX-0.3SY(C)	0.055	0.014	0.033	0.008	0.004	0.001
Story1	Column	TUB50X50X2	ELU 1.2D+1.0L-1.0SX-0.3SY(C)	0.04	0.012	0.022	0.006	0.003	0.001
Story1	Column	TUB50X50X2	ELU 1.2D+1.0L-1.0SX-0.3SY(T)	0.011	0.0003465	0.008	0.003		
Story1	Column	TUB50X50X2	ELU 1.2D+1.0L-1.0SX-0.3SY(C)	0.045	0.011	0.03	0.004	0.004	0.001
Story1	Column	TUB50X50X2	ELU 1.2D+1.0L-1.0SX-0.3SY(T)	0.029	0.029	0	0		
Story1	Column	TUB50X50X2	(T)	0.052	0.01	0.038	0.004	0.006	0.001
Story1	Column	TUB50X50X2	ELU 1.2D+1.0L-1.0SX-0.3SY(C)	0.053	0.014	0.031	0.008	0.004	0.001
Story1	Beam	TUB100X100X3	ELU 1.2D+1.6W1+1.0L(C)	0.072	0.006	0.03	0.037	0.031	0.032
Story1	Beam	TUB100X100X3	ELU 1.2D+1.6W1+1.0L(T)	0.091	0.01	0.045	0.036		
Story1	Beam	TUB100X100X3	(T)	0.096	0.016	0.046	0.034	0.033	0.025
Story1	Beam	TUB100X100X3	ELU 1.2D+1.6W1+1.0L(C)	0.071	0.006	0.029	0.036	0.033	0.031
Story1	Beam	TUB100X100X3	ELU 1.2D+1.6W1+1.0L(T)	0.094	0.01	0.049	0.035		
Story1	Beam	TUB100X100X3	ELU 1.2D+1.0L-1.0SX-0.3SY(C)	0.052	0.004	0.004	0.044	0.002	0.012
Story1	Beam	TUB100X100X3	ELU 1.2D+1.0L-1.0SX-0.3SY(T)	0.058	0.011	0.013	0.035		
Story1	Beam	TUB100X100X3	(T)	0.103	0.016	0.052	0.034	0.034	0.024
Story1	Beam	TUB100X100X3	ELU 1.2D+1.0L-1.0SY-0.3SX(C)	0.037	0.0003734	0.013	0.023	0.01	0.011
Story1	Beam	TUB100X100X3	ELU 1.2D+1.0L-1.0SY-0.3SX(T)	0.064	0.002	0.033	0.028		

Story	Design Type	Design Section	PMM Combo	PMM Ratio	P Ratio	M Major Ratio	M Minor Ratio	V Major Ratio	V Minor Ratio
Story1	Beam	TUB100X100X3	ELU 1.2D+1.6W1+1.0L(C)	0.062	0.001	0.027	0.034	0.018	0.028
Story1	Beam	TUB100X100X3	ELU 1.2D+1.6W1+1.0L(T)	0.066	0.001	0.037	0.028		
Story1	Beam	TUB100X100X3	ELU 1.2D+1.6W1+1.0L(C)	0.061	0.002	0.026	0.033	0.019	0.028
Story1	Beam	TUB100X100X3	ELU 1.2D+1.6W1+1.0L(T)	0.067	0.001	0.039	0.027		
Story1	Beam	TUB100X100X3	ELU 1.2D+1.0L-1.0SY-0.3SX(C)	0.147	0.001	0.119	0.026	0.043	0.031
Story1	Beam	TUB100X100X3	ELU 1.2D+1.0L-1.0SY-0.3SX(C)	0.195	0.01	0.159	0.026	0.146	0.031
Story1	Beam	TUB100X100X3	ELU 1.2D+1.0L-1.0SY-0.3SX(T)	0.15	0.001	0.109	0.04		
Story1	Beam	TUB100X100X3	ELU 1.2D+1.0L-1.0SY-0.3SX(C)	0.203	0.014	0.17	0.02	0.152	0.021
Story1	Beam	TUB100X100X3	(T)	0.093	0.005	0.043	0.045	0.014	0.019
Story1	Beam	TUB100X100X3	ELU 1.2D+1.0L-1.0SY-0.3SX(C)	0.058	0.001	0.009	0.048	0.002	0.017
Story1	Beam	TUB100X100X3	ELU 1.2D+1.0L-1.0SY-0.3SX(T)	0.05	0	0.017	0.033		
Story1	Beam	TUB100X100X3	ELU 1.2D+1.0L-1.0SY-0.3SX(C)	0.156	0.007	0.124	0.025	0.029	0.007
Story1	Beam	TUB100X100X3	ELU 1.2D+1.0L-1.0SY-0.3SX(T)	0.086	0.004	0.06	0.022		
Story1	Beam	TUB100X100X3	ELU 1.2D+1.0L-1.0SX-0.3SY(C)	0.059	0.004	0.019	0.036	0.006	0.007
Story1	Beam	TUB100X100X3	ELU 1.2D+1.0L-1.0SX-0.3SY(T)	0.063	0.005	0.007	0.051		
Story1	Beam	TUB100X100X3	ELU 1.2D+1.0L-1.0SY-0.3SX(C)	0.081	0.016	0.017	0.049	0.002	0.019
Story1	Beam	TUB100X100X3	ELU 1.2D+1.0L-1.0SY-0.3SX(C)	0.068	0.006	0.023	0.038	0.003	0.012
Story1	Beam	TUB100X100X3	ELU 1.2D+1.0L-1.0SY-0.3SX(T)	0.025	0.001	0.008	0.017		
Story1	Beam	TUB100X100X3	ELU 1.2D+1.0L-1.0SY-0.3SX(C)	0.063	0.005	0.022	0.036	0.003	0.01
Story1	Beam	TUB100X100X3	ELU 1.2D+1.0L-1.0SY-0.3SX(T)	0.018	0.0001871	0.002	0.017		
Story1	Beam	TUB100X100X3	(T)	0.09	0.02	0.016	0.054	0.001	0.017
Story1	Beam	TUB100X100X3	ELU 0.9D-1.0SY-0.3SX(C)	0.158	0.014	0.125	0.019	0.026	0.005
Story1	Beam	TUB100X100X3	ELU 0.9D-1.0SY-0.3SX(T)	0.172	0.015	0.129	0.028		
Story1	Beam	TUB100X100X3	ELU 0.9D-1.0SY-0.3SX(C)	0.038	0.014	0.017	0.007	0.002	0.003

Story	Design Type	Design Section	PMM Combo	PMM Ratio	P Ratio	M Major Ratio	M Minor Ratio	V Major Ratio	V Minor Ratio
Story1	Beam	TUB100X100X3	ELU 0.9D-1.0SY-0.3SX(T)	0.044	0.015	0.02	0.009		
Story1	Beam	TUB100X100X3	ELU 1.2D+1.6W1+1.0L(C)	0.044	0.01	0.011	0.023	0.002	0.003
Story1	Beam	TUB100X100X3	ELU 1.2D+1.6W1+1.0L(T)	0.03	0.006	0.007	0.017		
Story1	Beam	TUB100X100X3	ELU 1.2D+1.0L-1.0SY-0.3SX(C)	0.178	0.013	0.136	0.029	0.027	0.006
Story1	Beam	TUB100X100X3	ELU 1.2D+1.0L-1.0SY-0.3SX(T)	0.11	0.006	0.073	0.031		
Story1	Beam	TUB100X100X3	ELU 1.2D+1.0L-1.0SY-0.3SX(C)	0.198	0.001	0.155	0.041	0.046	0.031
Story1	Beam	TUB100X100X3	ELU 0.9D-1.0SY-0.3SX(C)	0.299	0.011	0.266	0.022	0.153	0.031
Story1	Beam	TUB100X100X3	ELU 0.9D-1.0SY-0.3SX(T)	0.319	0.01	0.269	0.04		
Story1	Beam	TUB100X100X3	ELU 1.2D+1.0L-1.0SY-0.3SX(C)	0.326	0.015	0.279	0.032	0.157	0.022
Story1	Beam	TUB100X100X3	(T)	0.064	0.002	0.033	0.028	0.01	0.011
Story1	Beam	TUB100X100X3	ELU 1.2D+1.0L-1.0SY-0.3SX(C)	0.036	0.0003729	0.006	0.029	0.002	0.01
Story1	Beam	TUB100X100X3	ELU 1.2D+1.0L-1.0SY-0.3SX(T)	0.033	0	0.014	0.019		
Story1	Beam	TUB100X100X3	ELU 1.2D+1.0L-1.0SY-0.3SX(C)	0.182	0.007	0.15	0.025	0.03	0.007
Story1	Beam	TUB100X100X3	ELU 1.2D+1.0L-1.0SY-0.3SX(T)	0.098	0.004	0.069	0.025		
Story1	Beam	TUB100X100X3	ELU 1.2D+1.0L-1.0SX-0.3SY(C)	0.058	0.004	0.019	0.034	0.006	0.007
Story1	Beam	TUB100X100X3	ELU 1.2D+1.0L-1.0SX-0.3SY(T)	0.062	0.004	0.008	0.049		
Story1	Beam	TUB100X100X3	ELU 1.2D+1.0L-1.0SX-0.3SY(C)	0.052	0.004	0.004	0.044	0.001	0.012
Story1	Beam	TUB100X100X3	ELU 1.2D+1.0L-1.0SY-0.3SX(C)	0.04	0.003	0.017	0.02	0.002	0.006
Story1	Beam	TUB100X100X3	ELU 1.2D+1.0L-1.0SY-0.3SX(T)	0.016	0.0002626	0.006	0.009		
Story1	Beam	TUB100X100X3	ELU 1.2D+1.0L-1.0SY-0.3SX(C)	0.04	0.002	0.016	0.021	0.002	0.005
Story1	Beam	TUB100X100X3	ELU 1.2D+1.0L-1.0SY-0.3SX(T)	0.011	0	0.004	0.007		
Story1	Beam	TUB100X100X3	(T)	0.058	0.011	0.013	0.035	0.002	0.01
Story1	Beam	TUB100X100X3	ELU 0.9D-1.0SY-0.3SX(C)	0.178	0.015	0.146	0.016	0.027	0.004
Story1	Beam	TUB100X100X3	ELU 0.9D-1.0SY-0.3SX(T)	0.192	0.016	0.151	0.025		

Story	Design Type	Design Section	PMM Combo	PMM Ratio	P Ratio	M Major Ratio	M Minor Ratio	V Major Ratio	V Minor Ratio
Story1	Beam	TUB100X100X3	ELU 0.9D-1.0SY-0.3SX(C)	0.039	0.015	0.018	0.006	0.002	0.002
Story1	Beam	TUB100X100X3	ELU 0.9D-1.0SY-0.3SX(T)	0.044	0.016	0.021	0.007		
Story1	Beam	TUB100X100X3	ELU 1.2D+1.0L-1.0SY-0.3SX(C)	0.041	0.014	0.021	0.007	0.002	0.002
Story1	Beam	TUB100X100X3	ELU 1.2D+1.0L-1.0SY-0.3SX(T)	0.026	0.006	0.006	0.014		
Story1	Beam	TUB100X100X3	ELU 1.2D+1.0L-1.0SY-0.3SX(C)	0.2	0.014	0.159	0.027	0.028	0.005
Story1	Beam	TUB100X100X3	ELU 1.2D+1.0L-1.0SY-0.3SX(T)	0.119	0.006	0.084	0.03		
Story1	Beam	TUB100X100X3	ELU 1.2D+1.0L-1.0SY-0.3SX(C)	0.09	0.005	0.019	0.067	0.006	0.01
Story1	Beam	TUB100X100X3	ELU 1.2D+1.0L-1.0SY-0.3SX(T)	0.04	0.001	0.011	0.028		
Story1	Beam	TUB100X100X3	ELU 1.2D+1.0L-1.0SY-0.3SX(C)	0.081	0.011	0.007	0.062	0.003	0.009
Story1	Beam	TUB100X100X3	ELU 1.2D+1.0L-1.0SX-0.3SY(C)	0.048	0.017	0.006	0.025	0.001	0.005
Story1	Beam	TUB100X100X3	ELU 1.2D+1.0L-1.0SY-0.3SX(C)	0.054	0.015	0.008	0.031	0.002	0.004
Story1	Beam	TUB100X100X3	ELU 1.2D+1.0L-1.0SY-0.3SX(C)	0.054	0.015	0.008	0.031	0.002	0.004
Story1	Beam	TUB100X100X3	ELU 1.2D+1.0L-1.0SX-0.3SY(C)	0.047	0.017	0.006	0.024	0.001	0.005
Story1	Beam	TUB100X100X3	ELU 1.2D+1.0L-1.0SY-0.3SX(C)	0.078	0.011	0.007	0.06	0.003	0.009
Story1	Beam	TUB100X100X3	ELU 1.2D+1.0L-1.0SY-0.3SX(C)	0.091	0.004	0.018	0.069	0.006	0.01
Story1	Beam	TUB100X100X3	ELU 1.2D+1.0L-1.0SY-0.3SX(T)	0.039	0.001	0.008	0.03		
Story1	Beam	TUB100X100X3	(T)	0.211	0.018	0.147	0.045	0.022	0.009
Story1	Beam	TUB100X100X3	(T)	0.068	0.02	0.028	0.02	0.004	0.007
Story1	Beam	TUB100X100X3	(T)	0.058	0.023	0.003	0.032	0.002	0.004
Story1	Beam	TUB100X100X3	(T)	0.059	0.026	0.009	0.025	0.001	0.002
Story1	Beam	TUB100X100X3	(T)	0.059	0.026	0.008	0.025	0.001	0.002
Story1	Beam	TUB100X100X3	(T)	0.058	0.023	0.003	0.032	0.002	0.004
Story1	Beam	TUB100X100X3	(T)	0.067	0.02	0.028	0.02	0.004	0.007
Story1	Beam	TUB100X100X3	(T)	0.228	0.018	0.161	0.048	0.022	0.009

Story	Design Type	Design Section	PMM Combo	PMM Ratio	P Ratio	M Major Ratio	M Minor Ratio	V Major Ratio	V Minor Ratio
Story1	Beam	TUB100X100X3	(T)	0.093	0.007	0.025	0.061	0.007	0.01
Story1	Beam	TUB100X100X3	ELU 1.2D+1.0L-1.0SY-0.3SX(C)	0.076	0.01	0.005	0.061	0.003	0.008
Story1	Beam	TUB100X100X3	ELU 1.2D+1.6W1+1.0L(C)	0.062	0.022	0.029	0.012	0.004	0.003
Story1	Beam	TUB100X100X3	ELU 1.2D+1.6W1+1.0L(C)	0.075	0.029	0.023	0.023	0.004	0.003
Story1	Beam	TUB100X100X3	ELU 1.2D+1.6W1+1.0L(C)	0.072	0.029	0.022	0.021	0.004	0.003
Story1	Beam	TUB100X100X3	ELU 1.2D+1.6W1+1.0L(C)	0.061	0.021	0.03	0.01	0.004	0.003
Story1	Beam	TUB100X100X3	ELU 1.2D+1.0L-1.0SY-0.3SX(C)	0.073	0.01	0.004	0.059	0.003	0.008
Story1	Beam	TUB100X100X3	(T)	0.091	0.008	0.022	0.062	0.006	0.01
Story1	Beam	TUB100X100X3	(T)	0.228	0.02	0.164	0.044	0.025	0.008
Story1	Beam	TUB100X100X3	(T)	0.07	0.024	0.029	0.017	0.004	0.006
Story1	Beam	TUB100X100X3	(T)	0.055	0.023	0.006	0.026	0.002	0.003
Story1	Beam	TUB100X100X3	(T)	0.063	0.027	0.015	0.022	0.002	0.001
Story1	Beam	TUB100X100X3	(T)	0.064	0.027	0.015	0.022	0.002	0.001
Story1	Beam	TUB100X100X3	(T)	0.055	0.023	0.006	0.026	0.002	0.003
Story1	Beam	TUB100X100X3	(T)	0.07	0.024	0.029	0.017	0.004	0.006
Story1	Beam	TUB100X100X3	(T)	0.246	0.02	0.181	0.046	0.025	0.008
Story1	Beam	TUB100X100X3	(T)	0.093	0.007	0.02	0.066	0.006	0.01
Story1	Beam	TUB100X100X3	ELU 1.2D+1.0L-1.0SY-0.3SX(C)	0.078	0.009	0.004	0.066	0.003	0.01
Story1	Beam	TUB100X100X3	ELU 1.2D+1.0L-1.0SX-0.3SY(C)	0.073	0.02	0.021	0.032	0.004	0.005
Story1	Beam	TUB100X100X3	ELU 1.2D+1.0L-1.0SX-0.3SY(C)	0.069	0.02	0.016	0.033	0.004	0.004
Story1	Beam	TUB100X100X3	ELU 1.2D+1.0L-1.0SX-0.3SY(C)	0.069	0.021	0.016	0.032	0.004	0.004
Story1	Beam	TUB100X100X3	ELU 1.2D+1.0L-1.0SX-0.3SY(C)	0.074	0.021	0.022	0.032	0.004	0.005
Story1	Beam	TUB100X100X3	ELU 1.2D+1.0L-1.0SY-0.3SX(C)	0.075	0.009	0.003	0.063	0.003	0.009
Story1	Beam	TUB100X100X3	(T)	0.092	0.007	0.017	0.068	0.005	0.01

Story	Design Type	Design Section	PMM Combo	PMM Ratio	P Ratio	M Major Ratio	M Minor Ratio	V Major Ratio	V Minor Ratio
Story1	Beam	TUB100X100X3	(T)	0.213	0.016	0.143	0.054	0.021	0.009
Story1	Beam	TUB100X100X3	(T)	0.065	0.02	0.024	0.021	0.004	0.007
Story1	Beam	TUB100X100X3	(T)	0.055	0.019	0.005	0.031	0.002	0.004
Story1	Beam	TUB100X100X3	(T)	0.056	0.021	0.01	0.025	0.002	0.001
Story1	Beam	TUB100X100X3	(T)	0.056	0.021	0.01	0.025	0.002	0.001
Story1	Beam	TUB100X100X3	(T)	0.055	0.019	0.005	0.031	0.002	0.004
Story1	Beam	TUB100X100X3	(T)	0.065	0.019	0.024	0.021	0.004	0.007
Story1	Beam	TUB100X100X3	(T)	0.232	0.016	0.158	0.058	0.022	0.009
Story1	Beam	TUB100X100X3	ELU 1.2D+1.0L-1.0SY-0.3SX(C)	0.083	0.004	0.011	0.068	0.004	0.011
Story1	Beam	TUB100X100X3	ELU 1.2D+1.0L-1.0SY-0.3SX(T)	0.031	0	0.001	0.03		
Story1	Beam	TUB100X100X3	ELU 1.2D+1.0L-1.0SY-0.3SX(C)	0.048	0.009	0.002	0.038	0.002	0.006
Story1	Beam	TUB100X100X3	ELU 1.2D+1.0L-1.0SY-0.3SX(C)	0.028	0.009	0.003	0.016	0.001	0.002
Story1	Beam	TUB100X100X3	ELU 1.2D+1.0L-1.0SY-0.3SX(C)	0.037	0.011	0.003	0.023	0.001	0.003
Story1	Beam	TUB100X100X3	ELU 1.2D+1.0L-1.0SY-0.3SX(C)	0.037	0.011	0.003	0.023	0.001	0.003
Story1	Beam	TUB100X100X3	ELU 1.2D+1.0L-1.0SY-0.3SX(C)	0.028	0.009	0.003	0.016	0.001	0.002
Story1	Beam	TUB100X100X3	ELU 1.2D+1.0L-1.0SY-0.3SX(C)	0.048	0.009	0.002	0.038	0.002	0.006
Story1	Beam	TUB100X100X3	ELU 1.2D+1.0L-1.0SY-0.3SX(C)	0.084	0.005	0.011	0.068	0.004	0.011
Story1	Beam	TUB100X100X3	ELU 1.2D+1.0L-1.0SY-0.3SX(T)	0.031	0	0.001	0.03		
Story1	Beam	TUB100X100X3	(T)	0.175	0.013	0.11	0.052	0.016	0.01
Story1	Beam	TUB100X100X3	(T)	0.06	0.013	0.022	0.025	0.003	0.007
Story1	Beam	TUB100X100X3	(T)	0.048	0.012	0.002	0.034	0.002	0.004
Story1	Beam	TUB100X100X3	(T)	0.042	0.013	0.003	0.026	0.001	0.002
Story1	Beam	TUB100X100X3	(T)	0.042	0.013	0.003	0.026	0.001	0.002
Story1	Beam	TUB100X100X3	(T)	0.048	0.012	0.002	0.034	0.002	0.004

Story	Design Type	Design Section	PMM Combo	PMM Ratio	P Ratio	M Major Ratio	M Minor Ratio	V Major Ratio	V Minor Ratio
Story1	Beam	TUB100X100X3	(T)	0.06	0.013	0.022	0.025	0.003	0.007
Story1	Beam	TUB100X100X3	(T)	0.189	0.013	0.12	0.056	0.016	0.01
Story1	Beam	TUB100X100X3	ELU 0.9D-1.0SY-0.3SX(C)	0.059	0.002	0.004	0.052	0.001	0.006
Story1	Beam	TUB100X100X3	ELU 0.9D-1.0SY-0.3SX(T)	0.06	0.002	0.004	0.053		
Story1	Beam	TUB100X100X3	ELU 1.2D+1.0L-1.0SY-0.3SX(C)	0.061	0.006	0.005	0.05	0.002	0.006
Story1	Beam	TUB100X100X3	ELU 1.2D+1.0L-1.0SY-0.3SX(T)	0.023	0.001	0	0.022		
Story1	Beam	TUB100X100X3	ELU 1.2D+1.0L-1.0SY-0.3SX(C)	0.034	0.013	0.004	0.017	0.001	0.009
Story1	Beam	TUB100X100X3	ELU 1.2D+1.0L-1.0SY-0.3SX(T)	0.042	0	0.003	0.039		
Story1	Beam	TUB100X100X3	ELU 1.2D+1.0L-1.0SY-0.3SX(C)	0.042	0.014	0.006	0.022	0.001	0.006
Story1	Beam	TUB100X100X3	ELU 1.2D+1.0L-1.0SY-0.3SX(T)	0.038	0.003	0.001	0.035		
Story1	Beam	TUB100X100X3	ELU 1.2D+1.0L-1.0SY-0.3SX(C)	0.041	0.014	0.006	0.021	0.001	0.006
Story1	Beam	TUB100X100X3	ELU 1.2D+1.0L-1.0SY-0.3SX(T)	0.038	0.003	0.001	0.035		
Story1	Beam	TUB100X100X3	ELU 1.2D+1.0L-1.0SY-0.3SX(C)	0.033	0.013	0.004	0.016	0.001	0.009
Story1	Beam	TUB100X100X3	ELU 1.2D+1.0L-1.0SY-0.3SX(T)	0.041	0.003	0.001	0.038		
Story1	Beam	TUB100X100X3	ELU 1.2D+1.0L-1.0SY-0.3SX(C)	0.061	0.007	0.005	0.05	0.002	0.006
Story1	Beam	TUB100X100X3	ELU 1.2D+1.0L-1.0SY-0.3SX(T)	0.022	0.001	0.000156	0.021		
Story1	Beam	TUB100X100X3	(T)	0.062	0.003	0.003	0.056	0.001	0.006
Story1	Beam	TUB100X100X3	(T)	0.12	0.003	0.003	0.114	0.004	0.012
Story1	Beam	TUB100X100X3	(T)	0.038	0.005	0.000443	0.033	0.001	0.005
Story1	Beam	TUB100X100X3	(T)	0.046	0.005	0	0.041	0.001	0.002
Story1	Beam	TUB100X100X3	(T)	0.039	0.005	0.0003026	0.034	0.001	0.001
Story1	Beam	TUB100X100X3	(T)	0.039	0.005	0.0003106	0.034	0.001	0.001
Story1	Beam	TUB100X100X3	(T)	0.046	0.005	0	0.041	0.001	0.002
Story1	Beam	TUB100X100X3	(T)	0.038	0.005	0.000387	0.033	0.001	0.005

Story	Design Type	Design Section	PMM Combo	PMM Ratio	P Ratio	M Major Ratio	M Minor Ratio	V Major Ratio	V Minor Ratio
Story1	Beam	TUB100X100X3	(T)	0.12	0.003	0.004	0.114	0.004	0.012
Story1	Beam	TUB100X100X3	ELU 1.2D+1.0L-1.0SY-0.3SX(C)	0.058	0.008	0.004	0.047	0.001	0.005
Story1	Beam	TUB100X100X3	ELU 1.2D+1.0L-1.0SY-0.3SX(C)	0.037	0.008	0.001	0.027	0.001	0.005
Story1	Beam	TUB100X100X3	ELU 1.2D+1.6W1+1.0L(C)	0.068	0.014	0.002	0.052	0.001	0.009
Story1	Beam	TUB100X100X3	ELU 1.2D+1.6W1+1.0L(C)	0.069	0.017	0.0003252	0.052	0.001	0.01
Story1	Beam	TUB100X100X3	ELU 1.2D+1.6W1+1.0L(C)	0.068	0.017	0.0003171	0.052	0.001	0.01
Story1	Beam	TUB100X100X3	ELU 1.2D+1.6W1+1.0L(C)	0.068	0.014	0.002	0.052	0.001	0.009
Story1	Beam	TUB100X100X3	ELU 1.2D+1.0L-1.0SY-0.3SX(C)	0.036	0.008	0.001	0.027	0.001	0.005
Story1	Beam	TUB100X100X3	ELU 1.2D+1.0L-1.0SY-0.3SX(C)	0.058	0.007	0.004	0.047	0.001	0.006
Story1	Beam	TUB100X100X3	ELU 0.9D-1.0SX-0.3SY(C)	0.055	0.014	0.028	0.012	0.004	0.018
Story1	Beam	TUB100X100X3	ELU 0.9D-1.0SX-0.3SY(T)	0.194	0.001	0.01	0.183		
Story1	Beam	TUB100X100X3	(T)	0.059	0.006	0.003	0.05	0.001	0.008
Story1	Beam	TUB100X100X3	(T)	0.076	0.008	0.002	0.066	0.001	0.004
Story1	Beam	TUB100X100X3	(T)	0.071	0.009	0.004	0.058	0.001	0.001
Story1	Beam	TUB100X100X3	(T)	0.071	0.009	0.004	0.058	0.001	0.001
Story1	Beam	TUB100X100X3	(T)	0.076	0.008	0.002	0.066	0.001	0.004
Story1	Beam	TUB100X100X3	ELU 0.9D-1.0SX-0.3SY(C)	0.009	0.001	0.004	0.004	0.001	0.008
Story1	Beam	TUB100X100X3	ELU 0.9D-1.0SX-0.3SY(T)	0.059	0.006	0.003	0.05		
Story1	Beam	TUB100X100X3	ELU 0.9D-1.0SX-0.3SY(C)	0.056	0.016	0.028	0.012	0.004	0.018
Story1	Beam	TUB100X100X3	ELU 0.9D-1.0SX-0.3SY(T)	0.194	0.001	0.01	0.183		
Story1	Beam	TUB50X50X2	(T)	0.224	0.001	0.06	0.163	0.008	0.059
Story1	Beam	TUB50X50X2	ELU 1.2D+1.6W1+1.0L(C)	0.306	0.001	0.086	0.219	0.025	0.068
Story1	Beam	TUB50X50X2	ELU 1.2D+1.6W1+1.0L(C)	0.293	0.004	0.274	0.015	0.035	0.024
Story1	Beam	TUB50X50X2	ELU 1.2D+1.6W1+1.0L(T)	0.275	0.001	0.199	0.074		

Story	Design Type	Design Section	PMM Combo	PMM Ratio	P Ratio	M Major Ratio	M Minor Ratio	V Major Ratio	V Minor Ratio
Story1	Beam	TUB50X50X2	ELU 1.2D+1.6W1+1.0L(C)	0.308	0.002	0.109	0.196	0.025	0.061
Story1	Beam	TUB50X50X2	(T)	0.204	0.002	0.159	0.044	0.012	0.026
Story1	Beam	TUB50X50X2	ELU 1.2D+1.6W1+1.0L(C)	0.219	0.002	0.102	0.115	0.022	0.036
Story1	Beam	TUB50X50X2	ELU 1.2D+1.6W1+1.0L(C)	0.351	0.006	0.343	0.002	0.045	0.003
Story1	Beam	TUB50X50X2	ELU 1.2D+1.6W1+1.0L(T)	0.259	0.002	0.251	0.007		
Story1	Beam	TUB50X50X2	ELU 1.2D+1.6W1+1.0L(C)	0.121	0.002	0.118	0.001	0.025	0.004
Story1	Beam	TUB50X50X2	(T)	0.205	0.002	0.16	0.043	0.012	0.026
Story1	Beam	TUB50X50X2	ELU 1.2D+1.6W1+1.0L(C)	0.218	0.002	0.103	0.113	0.022	0.035
Story1	Beam	TUB50X50X2	ELU 1.2D+1.6W1+1.0L(C)	0.295	0.004	0.28	0.01	0.036	0.023
Story1	Beam	TUB50X50X2	ELU 1.2D+1.6W1+1.0L(T)	0.276	0.001	0.203	0.073		
Story1	Beam	TUB50X50X2	ELU 1.2D+1.6W1+1.0L(C)	0.31	0.002	0.112	0.196	0.026	0.061
Story1	Beam	TUB50X50X2	(T)	0.223	0.001	0.059	0.163	0.008	0.059
Story1	Beam	TUB50X50X2	ELU 1.2D+1.6W1+1.0L(C)	0.309	0.001	0.088	0.221	0.025	0.069
Story1	Beam	TUB50X50X2	(T)	0.236	0.001	0.053	0.182	0.007	0.065
Story1	Beam	TUB50X50X2	ELU 1.2D+1.0L-1.0SY-0.3SX(C)	0.335	0.001	0.092	0.242	0.026	0.075
Story1	Beam	TUB50X50X2	ELU 1.2D+1.0L-1.0SY-0.3SX(T)	0.06	0	0.026	0.034		
Story1	Beam	TUB50X50X2	ELU 1.2D+1.6W1+1.0L(C)	0.29	0.012	0.193	0.085	0.029	0.035
Story1	Beam	TUB50X50X2	ELU 1.2D+1.6W1+1.0L(T)	0.131	0.002	0.078	0.051		
Story1	Beam	TUB50X50X2	ELU 1.2D+1.0L-1.0SY-0.3SX(C)	0.326	0.001	0.107	0.218	0.028	0.068
Story1	Beam	TUB50X50X2	ELU 0.9D+1.6W1(C)	0.124	0.0001505	0.065	0.059	0.009	0.029
Story1	Beam	TUB50X50X2	ELU 0.9D+1.6W1(T)	0.176	0.002	0.092	0.082		
Story1	Beam	TUB50X50X2	ELU 1.2D+1.0L-1.0SY-0.3SX(C)	0.22	0.001	0.092	0.127	0.023	0.039
Story1	Beam	TUB50X50X2	ELU 1.2D+1.6W1+1.0L(C)	0.253	0.017	0.235	0.001	0.036	0.002
Story1	Beam	TUB50X50X2	ELU 1.2D+1.6W1+1.0L(T)	0.228	0.002	0.221	0.005		

Story	Design Type	Design Section	PMM Combo	PMM Ratio	P Ratio	M Major Ratio	M Minor Ratio	V Major Ratio	V Minor Ratio
Story1	Beam	TUB50X50X2	ELU 1.2D+1.6W1+1.0L(C)	0.114	0.002	0.112	0	0.027	0.007
Story1	Beam	TUB50X50X2	ELU 0.9D+1.6W1(C)	0.126	0.0001535	0.064	0.062	0.009	0.029
Story1	Beam	TUB50X50X2	ELU 0.9D+1.6W1(T)	0.176	0.002	0.092	0.083		
Story1	Beam	TUB50X50X2	ELU 1.2D+1.0L-1.0SY-0.3SX(C)	0.22	0.001	0.092	0.128	0.023	0.04
Story1	Beam	TUB50X50X2	ELU 1.2D+1.6W1+1.0L(C)	0.285	0.012	0.187	0.086	0.028	0.035
Story1	Beam	TUB50X50X2	ELU 1.2D+1.6W1+1.0L(T)	0.129	0.002	0.075	0.052		
Story1	Beam	TUB50X50X2	ELU 1.2D+1.0L-1.0SY-0.3SX(C)	0.324	0.001	0.105	0.218	0.028	0.068
Story1	Beam	TUB50X50X2	(T)	0.237	0.001	0.053	0.183	0.007	0.065
Story1	Beam	TUB50X50X2	ELU 1.2D+1.0L-1.0SY-0.3SX(C)	0.333	0.001	0.093	0.24	0.026	0.075
Story1	Beam	TUB50X50X2	ELU 1.2D+1.0L-1.0SY-0.3SX(T)	0.06	0	0.026	0.034		
Story1	Beam	TUB100X100X3	ELU 1.2D+1.0L-1.0SY-0.3SX(C)	0.036	0.003	0.01	0.023	0.005	0.017
Story1	Beam	TUB100X100X3	(T)	0.04	0.005	0.015	0.019	0.005	0.009
Story1	Beam	TUB100X100X3	ELU 1.2D+1.0L-1.0SX-0.3SY(C)	0.024	0.001	0.008	0.015	0.004	0.01
Story1	Beam	TUB100X100X3	(T)	0.048	0.001	0.013	0.034	0.007	0.015
Story1	Beam	TUB100X100X3	(T)	0.065	0.004	0.021	0.04	0.012	0.02
Story1	Beam	TUB100X100X3	ELU 1.2D+1.0L-1.0SY-0.3SX(C)	0.059	0.005	0.025	0.029	0.011	0.017
Story1	Beam	TUB100X100X3	(T)	0.035	0.003	0.005	0.027	0.002	0.008
Story1	Beam	TUB100X100X3	(T)	0.02	0.001	0.002	0.017	0.002	0.005
Story1	Beam	TUB100X100X3	ELU 1.2D+1.0L-1.0SX-0.3SY(C)	0.035	0.004	0.011	0.02	0.003	0.003
Story1	Beam	TUB100X100X3	ELU 1.2D+1.0L-1.0SX-0.3SY(C)	0.03	0.001	0.008	0.021	0.002	0.004
Story1	Beam	TUB100X100X3	ELU 1.2D+1.0L-1.0SX-0.3SY(C)	0.059	0.003	0.003	0.053	0.002	0.011
Story1	Beam	TUB100X100X3	(T)	0.023	0.001	0.002	0.021	0.001	0.003
Story1	Beam	TUB100X100X3	(T)	0.021	0.001	0.002	0.019	0.001	0.002
Story1	Beam	TUB100X100X3	(T)	0.059	0.004	0.01	0.045	0.002	0.011

Story	Design Type	Design Section	PMM Combo	PMM Ratio	P Ratio	M Major Ratio	M Minor Ratio	V Major Ratio	V Minor Ratio
Story1	Beam	TUB100X100X3	(T)	0.026	0.004	0.015	0.008	0.003	0.001
Story1	Beam	TUB100X100X3	(T)	0.008	0.004	0.001	0.004	0.001	0.001
Story1	Beam	TUB100X100X3	ELU 1.2D+1.0L-1.0SY-0.3SX(C)	0.009	0.005	0.001	0.003	0.0004971	0.00035
Story1	Beam	TUB100X100X3	ELU 1.2D+1.0L-1.0SY-0.3SX(C)	0.028	0.005	0.019	0.005	0.003	0.001
Story1	Beam	TUB100X100X3	ELU 1.2D+1.0L-1.0SX-0.3SY(C)	0.044	0.002	0.032	0.01	0.01	0.006
Story1	Beam	TUB100X100X3	ELU 1.2D+1.0L-1.0SX-0.3SY(T)	0.01	0	0.0004078	0.01		
Story1	Beam	TUB100X100X3	ELU 1.2D+1.0L-1.0SX-0.3SY(C)	0.084	0.001	0.066	0.018	0.016	0.011
Story1	Beam	TUB100X100X3	ELU 1.2D+1.0L-1.0SX-0.3SY(T)	0.012	0	0.001	0.01		
Story1	Beam	TUB100X100X3	(T)	0.117	0.003	0.09	0.023	0.022	0.013
Story1	Beam	TUB100X100X3	ELU 1.2D+1.6W2+1.0L(C)	0.014	0	0.007	0.007	0.009	0.004
Story1	Beam	TUB100X100X3	ELU 1.2D+1.6W2+1.0L(T)	0.036	0.0004875	0.018	0.018		
Story1	Beam	TUB100X100X3	(T)	0.067	0.0002274	0.009	0.058	0.01	0.012
Story1	Beam	TUB100X100X3	ELU 1.2D+1.0L-1.0SX-0.3SY(C)	0.178	0.002	0.154	0.022	0.033	0.011
Story1	Beam	TUB100X100X3	ELU 1.2D+1.0L-1.0SX-0.3SY(T)	0.033	0.0002705	0.024	0.008		
Story1	Beam	TUB100X100X3	ELU 1.2D+1.6W1+1.0L(C)	0.048	0.000253	0.034	0.013	0.033	0.01
Story1	Beam	TUB100X100X3	ELU 1.2D+1.6W1+1.0L(T)	0.165	0.002	0.152	0.011		
Story1	Beam	TUB100X100X3	(T)	0.131	0.003	0.11	0.019	0.026	0.009
Story1	Beam	TUB100X100X3	ELU 1.2D+1.0L-1.0SX-0.3SY(C)	0.109	0.001	0.095	0.013	0.023	0.01
Story1	Beam	TUB100X100X3	ELU 1.2D+1.0L-1.0SX-0.3SY(T)	0.023	0.0001098	0.019	0.005		
Story1	Beam	TUB100X100X3	(T)	0.133	0.001	0.1	0.031	0.021	0.016
Story1	Beam	TUB100X100X3	(T)	0.095	0.002	0.001	0.093	0.008	0.023
Story1	Beam	TUB100X100X3	ELU 1.2D+1.0L-1.0SX-0.3SY(C)	0.136	0.002	0.11	0.024	0.023	0.013
Story1	Beam	TUB100X100X3	ELU 1.2D+1.0L-1.0SY-0.3SX(C)	0.04	0.003	0.013	0.025	0.005	0.017
Story1	Beam	TUB100X100X3	ELU 1.2D+1.0L-1.0SX-0.3SY(C)	0.038	0.002	0.002	0.034	0.002	0.007

Story	Design Type	Design Section	PMM Combo	PMM Ratio	P Ratio	M Major Ratio	M Minor Ratio	V Major Ratio	V Minor Ratio
Story1	Beam	TUB100X100X3	ELU 1.2D+1.0L-1.0SX-0.3SY(T)	0.039	0.002	0.007	0.03		
Story1	Beam	TUB100X100X3	(T)	0.048	0.005	0.019	0.023	0.006	0.009
Story1	Beam	TUB100X100X3	(T)	0.019	0.002	0.003	0.014	0.001	0.005
Story1	Beam	TUB100X100X3	ELU 1.2D+1.0L-1.0SX-0.3SY(C)	0.023	0.001	0.008	0.014	0.004	0.009
Story1	Beam	TUB100X100X3	(T)	0.049	0.001	0.013	0.034	0.007	0.016
Story1	Beam	TUB100X100X3	(T)	0.066	0.004	0.022	0.04	0.013	0.02
Story1	Beam	TUB100X100X3	ELU 1.2D+1.0L-1.0SY-0.3SX(C)	0.061	0.006	0.026	0.029	0.011	0.017
Story1	Beam	TUB100X100X3	(T)	0.019	0.002	0.003	0.014	0.001	0.005
Story1	Beam	TUB100X100X3	(T)	0.013	0.0004288	0.002	0.011	0.001	0.003
Story1	Beam	TUB100X100X3	ELU 1.2D+1.0L-1.0SX-0.3SY(C)	0.036	0.004	0.012	0.02	0.004	0.003
Story1	Beam	TUB100X100X3	ELU 1.2D+1.0L-1.0SX-0.3SY(C)	0.031	0.002	0.008	0.021	0.002	0.004
Story1	Beam	TUB100X100X3	ELU 1.2D+1.0L-1.0SX-0.3SY(C)	0.038	0.002	0.002	0.034	0.001	0.007
Story1	Beam	TUB100X100X3	(T)	0.021	0.001	0.001	0.02	0.001	0.002
Story1	Beam	TUB100X100X3	(T)	0.02	0.001	0.001	0.019	0.001	0.001
Story1	Beam	TUB100X100X3	(T)	0.039	0.002	0.007	0.03	0.002	0.007
Story1	Beam	TUB100X100X3	(T)	0.025	0.004	0.016	0.006	0.003	0.001
Story1	Beam	TUB100X100X3	(T)	0.008	0.004	0.002	0.002	0.001	0.001
Story1	Beam	TUB100X100X3	ELU 1.2D+1.0L-1.0SY-0.3SX(C)	0.008	0.005	0.001	0.002	0.001	0.0002249
Story1	Beam	TUB100X100X3	ELU 1.2D+1.0L-1.0SY-0.3SX(T)	0.001	0	0.001	0.001		
Story1	Beam	TUB100X100X3	ELU 1.2D+1.0L-1.0SY-0.3SX(C)	0.027	0.005	0.019	0.004	0.003	0.001
Story1	Beam	TUB100X100X3	ELU 1.2D+1.0L-1.0SY-0.3SX(T)	0.005	0	0.002	0.003		
Story1	Beam	TUB100X100X3	ELU 1.2D+1.6W2+1.0L(C)	0.013	0	0.007	0.006	0.009	0.005
Story1	Beam	TUB100X100X3	ELU 1.2D+1.6W2+1.0L(T)	0.038	0.001	0.019	0.018		
Story1	Beam	TUB100X100X3	ELU 1.2D+1.0L-1.0SX-0.3SY(C)	0.043	0.002	0.032	0.009	0.011	0.005

Story	Design Type	Design Section	PMM Combo	PMM Ratio	P Ratio	M Major Ratio	M Minor Ratio	V Major Ratio	V Minor Ratio
Story1	Beam	TUB100X100X3	ELU 1.2D+1.0L-1.0SX-0.3SY(T)	0.012	0	0.0003808	0.011		
Story1	Beam	TUB100X100X3	ELU 1.2D+1.0L-1.0SX-0.3SY(C)	0.084	0.001	0.066	0.017	0.016	0.01
Story1	Beam	TUB100X100X3	(T)	0.127	0.004	0.095	0.029	0.023	0.015
Story1	Beam	TUB100X100X3	ELU 1.2D+1.0L-1.0SX-0.3SY(C)	0.159	0.002	0.127	0.03	0.024	0.013
Story1	Beam	TUB100X100X3	(T)	0.159	0.001	0.116	0.042	0.022	0.017
Story1	Beam	TUB100X100X3	(T)	0.095	0.002	0.0003884	0.092	0.008	0.023
Story1	Beam	TUB100X100X3	ELU 1.2D+1.6W1+1.0L(C)	0.056	0.0001759	0.04	0.016	0.034	0.011
Story1	Beam	TUB100X100X3	ELU 1.2D+1.6W1+1.0L(T)	0.195	0.002	0.176	0.016		
Story1	Beam	TUB100X100X3	ELU 1.2D+1.0L-1.0SX-0.3SY(C)	0.21	0.002	0.179	0.029	0.034	0.012
Story1	Beam	TUB100X100X3	ELU 1.2D+1.0L-1.0SX-0.3SY(T)	0.041	0.000218	0.03	0.01		
Story1	Beam	TUB100X100X3	ELU 0.9D+1.6W2(C)	0.063	0	0.003	0.06	0.01	0.012
Story1	Beam	TUB100X100X3	ELU 0.9D+1.6W2(T)	0.066	0.0001279	0.007	0.059		
Story1	Beam	TUB100X100X3	ELU 1.2D+1.0L-1.0SX-0.3SY(C)	0.112	0.002	0.096	0.014	0.025	0.011
Story1	Beam	TUB100X100X3	ELU 1.2D+1.0L-1.0SX-0.3SY(T)	0.025	0.0001247	0.02	0.005		
Story1	Beam	TUB100X100X3	(T)	0.145	0.003	0.115	0.027	0.028	0.013
Story1	Beam	TUB50X50X2	ELU 1.2D+1.6W1+1.0L(C)	0.199	0.003	0.178	0.018	0.037	0.007
Story1	Beam	TUB50X50X2	ELU 1.2D+1.6W1+1.0L(C)	0.182	0.003	0.159	0.02	0.035	0.007
Story1	Beam	TUB50X50X2	(T)	0.215	0.001	0.208	0.006	0.04	0.003
Story1	Beam	TUB50X50X2	(T)	0.188	0.0002655	0.179	0.009	0.036	0.003
Story1	Beam	TUB50X50X2	ELU 1.2D+1.0L-1.0SX-0.3SY(C)	0.191	0.003	0.14	0.048	0.032	0.011
Story1	Beam	TUB50X50X2	ELU 1.2D+1.0L-1.0SX-0.3SY(T)	0.01	0	0.009	0.002		
Story1	Beam	TUB50X50X2	ELU 1.2D+1.0L-1.0SX-0.3SY(C)	0.182	0.004	0.13	0.049	0.03	0.01
Story1	Beam	TUB50X50X2	ELU 1.2D+1.0L-1.0SX-0.3SY(C)	0.075	0.004	0.06	0.011	0.021	0.004
Story1	Beam	TUB50X50X2	ELU 1.2D+1.0L-1.0SX-0.3SY(T)	0.016	0.001	0.009	0.006		

Story	Design Type	Design Section	PMM Combo	PMM Ratio	P Ratio	M Major Ratio	M Minor Ratio	V Major Ratio	V Minor Ratio
Story1	Beam	TUB50X50X2	ELU 1.2D+1.0L-1.0SX-0.3SY(C)	0.071	0.005	0.055	0.011	0.02	0.004
Story1	Beam	TUB50X50X2	ELU 1.2D+1.0L-1.0SX-0.3SY(T)	0.015	0.001	0.008	0.006		
Story1	Beam	TUB100X100X3	ELU 1.2D+1.6W1+1.0L(C)	0.176	0.025	0.096	0.055	0.024	0.008
Story1	Beam	TUB100X100X3	ELU 1.2D+1.6W1+1.0L(C)	0.1	0.039	0.057	0.004	0.02	0.004
Story1	Beam	TUB100X100X3	ELU 1.2D+1.6W1+1.0L(C)	0.101	0.04	0.057	0.004	0.02	0.003
Story1	Beam	TUB100X100X3	ELU 1.2D+1.6W1+1.0L(C)	0.189	0.028	0.107	0.054	0.024	0.008
Story1	Beam	TUB100X100X3	ELU 1.2D+1.6W1+1.0L(C)	0.154	0.001	0.108	0.044	0.026	0.007
Story1	Beam	TUB100X100X3	ELU 1.2D+1.6W1+1.0L(T)	0.054	0	0.037	0.017		
Story1	Beam	TUB100X100X3	ELU 1.2D+1.0L-1.0SX-0.3SY(C)	0.05	0.001	0.044	0.005	0.02	0.003
Story1	Beam	TUB100X100X3	ELU 1.2D+1.0L-1.0SX-0.3SY(T)	0.07	0	0.063	0.006		
Story1	Beam	TUB100X100X3	ELU 1.2D+1.0L-1.0SX-0.3SY(C)	0.055	0.005	0.044	0.005	0.02	0.003
Story1	Beam	TUB100X100X3	ELU 1.2D+1.0L-1.0SX-0.3SY(T)	0.07	0	0.064	0.006		
Story1	Beam	TUB100X100X3	ELU 1.2D+1.6W1+1.0L(C)	0.174	0.001	0.128	0.045	0.027	0.007
Story1	Beam	TUB100X100X3	ELU 1.2D+1.6W1+1.0L(T)	0.087	0	0.053	0.035		
Story1	Beam	TUB100X100X3	ELU 1.2D+1.0L-1.0SY-0.3SX(C)	0.162	0.018	0.065	0.078	0.024	0.008
Story1	Beam	TUB100X100X3	ELU 1.2D+1.0L-1.0SY-0.3SX(C)	0.095	0.031	0.024	0.04	0.02	0.005
Story1	Beam	TUB100X100X3	ELU 1.2D+1.0L-1.0SY-0.3SX(T)	0.017	0	0.001	0.016		
Story1	Beam	TUB100X100X3	ELU 1.2D+1.0L-1.0SY-0.3SX(C)	0.092	0.032	0.024	0.037	0.02	0.004
Story1	Beam	TUB100X100X3	ELU 1.2D+1.0L-1.0SY-0.3SX(T)	0.017	0	0.001	0.016		
Story1	Beam	TUB100X100X3	ELU 1.2D+1.0L-1.0SY-0.3SX(C)	0.171	0.021	0.072	0.078	0.024	0.008
Story1	Beam	TUB100X100X3	ELU 1.2D+1.0L-1.0SY-0.3SX(C)	0.131	0.025	0.037	0.069	0.019	0.007
Story1	Beam	TUB100X100X3	ELU 1.2D+1.6W1+1.0L(C)	0.111	0.033	0.054	0.023	0.019	0.003
Story1	Beam	TUB100X100X3	ELU 1.2D+1.6W1+1.0L(C)	0.111	0.034	0.055	0.022	0.019	0.003
Story1	Beam	TUB100X100X3	ELU 1.2D+1.0L-1.0SY-0.3SX(C)	0.136	0.029	0.038	0.069	0.019	0.007

Story	Design Type	Design Section	PMM Combo	PMM Ratio	P Ratio	M Major Ratio	M Minor Ratio	V Major Ratio	V Minor Ratio
Story1	Beam	TUB50X50X2	ELU 1.2D+1.6W1+1.0L(C)	0.366	0.014	0.27	0.083	0.03	0.037
Story1	Beam	TUB50X50X2	ELU 1.2D+1.6W1+1.0L(T)	0.169	0.001	0.064	0.105		
Story1	Beam	TUB100X100X3	ELU 1.2D+1.0L-1.0SY-0.3SX(C)	0.22	0.004	0.123	0.092	0.048	0.025
Story1	Beam	TUB100X100X3	ELU 1.2D+1.0L-1.0SY-0.3SX(T)	0.096	0.001	0.076	0.019		
Story1	Beam	TUB100X100X3	ELU 1.2D+1.6W1+1.0L(C)	0.284	0.007	0.247	0.03	0.014	0.015
Story1	Beam	TUB100X100X3	ELU 1.2D+1.6W1+1.0L(T)	0.124	0.001	0.1	0.023		
Story1	Beam	TUB100X100X3	ELU 1.2D+1.6W1+1.0L(C)	0.285	0.006	0.247	0.032	0.018	0.012
Story1	Beam	TUB100X100X3	ELU 1.2D+1.6W1+1.0L(T)	0.126	0.001	0.1	0.024		
Story1	Beam	TUB100X100X3	ELU 1.2D+1.6W1+1.0L(C)	0.251	0.005	0.179	0.067	0.051	0.023
Story1	Beam	TUB100X100X3	ELU 1.2D+1.6W1+1.0L(T)	0.128	0.002	0.08	0.046		
Story1	Beam	TUB100X100X3	ELU 1.2D+1.0L-1.0SY-0.3SX(C)	0.129	0.001	0.05	0.079	0.022	0.027
Story1	Beam	TUB100X100X3	ELU 1.2D+1.0L-1.0SY-0.3SX(T)	0.085	0.003	0.064	0.018		
Story1	Beam	TUB100X100X3	ELU 1.2D+1.6W1+1.0L(C)	0.126	0.001	0.08	0.045	0.017	0.022
Story1	Beam	TUB100X100X3	ELU 1.2D+1.6W1+1.0L(T)	0.103	0.004	0.061	0.038		
Story1	Beam	TUB50X50X2	ELU 1.2D+1.6W1+1.0L(C)	0.452	0.021	0.43	0.002	0.05	0.004
Story1	Beam	TUB50X50X2	ELU 1.2D+1.6W1+1.0L(T)	0.056	0.0004612	0.055	0.001		
Story1	Beam	TUB100X100X3	ELU 1.2D+1.6W1+1.0L(C)	0.237	0.01	0.227	0.001	0.058	0.016
Story1	Beam	TUB100X100X3	ELU 1.2D+1.6W1+1.0L(T)	0.096	0.001	0.095	0.0004195		
Story1	Beam	TUB100X100X3	ELU 1.2D+1.6W1+1.0L(C)	0.327	0.009	0.319	0.000152	0.018	0.007
Story1	Beam	TUB100X100X3	ELU 1.2D+1.6W1+1.0L(T)	0.133	0.0003703	0.133	0		
Story1	Beam	TUB100X100X3	ELU 1.2D+1.6W1+1.0L(C)	0.327	0.008	0.319	0.0002789	0.023	0.001
Story1	Beam	TUB100X100X3	ELU 1.2D+1.6W1+1.0L(T)	0.134	0.001	0.133	0.000141		
Story1	Beam	TUB100X100X3	ELU 1.2D+1.6W1+1.0L(C)	0.228	0.007	0.22	0.002	0.063	0.009
Story1	Beam	TUB100X100X3	ELU 1.2D+1.6W1+1.0L(T)	0.103	0.002	0.1	0.001		

Story	Design Type	Design Section	PMM Combo	PMM Ratio	P Ratio	M Major Ratio	M Minor Ratio	V Major Ratio	V Minor Ratio
Story1	Beam	TUB100X100X3	ELU 1.2D+1.0L-1.0SX-0.3SY(C)	0.088	0.000235	0.049	0.038	0.024	0.013
Story1	Beam	TUB100X100X3	ELU 1.2D+1.0L-1.0SX-0.3SY(T)	0.086	0.004	0.081	0.0003983		
Story1	Beam	TUB100X100X3	ELU 1.2D+1.6W1+1.0L(C)	0.079	0.001	0.077	0.001	0.016	0.001
Story1	Beam	TUB100X100X3	ELU 1.2D+1.6W1+1.0L(T)	0.105	0.005	0.1	0.0002649		
Story1	Beam	TUB50X50X2	ELU 1.2D+1.6W1+1.0L(C)	0.37	0.014	0.271	0.085	0.03	0.037
Story1	Beam	TUB50X50X2	ELU 1.2D+1.6W1+1.0L(T)	0.171	0.001	0.064	0.106		
Story1	Beam	TUB100X100X3	ELU 1.2D+1.0L-1.0SY-0.3SX(C)	0.211	0.004	0.12	0.086	0.046	0.023
Story1	Beam	TUB100X100X3	ELU 1.2D+1.0L-1.0SY-0.3SX(T)	0.095	0.001	0.075	0.019		
Story1	Beam	TUB100X100X3	ELU 1.2D+1.6W1+1.0L(C)	0.277	0.007	0.241	0.03	0.014	0.014
Story1	Beam	TUB100X100X3	ELU 1.2D+1.6W1+1.0L(T)	0.121	0.001	0.097	0.023		
Story1	Beam	TUB100X100X3	ELU 1.2D+1.6W1+1.0L(C)	0.278	0.006	0.241	0.031	0.017	0.012
Story1	Beam	TUB100X100X3	ELU 1.2D+1.6W1+1.0L(T)	0.123	0.001	0.098	0.024		
Story1	Beam	TUB100X100X3	ELU 1.2D+1.6W1+1.0L(C)	0.24	0.005	0.173	0.062	0.05	0.022
Story1	Beam	TUB100X100X3	ELU 1.2D+1.6W1+1.0L(T)	0.123	0.002	0.078	0.043		
Story1	Beam	TUB100X100X3	ELU 1.2D+1.0L-1.0SY-0.3SX(C)	0.125	0.001	0.049	0.075	0.022	0.025
Story1	Beam	TUB100X100X3	ELU 1.2D+1.0L-1.0SY-0.3SX(T)	0.085	0.003	0.064	0.018		
Story1	Beam	TUB100X100X3	ELU 1.2D+1.6W1+1.0L(C)	0.122	0.001	0.079	0.042	0.017	0.021
Story1	Beam	TUB100X100X3	ELU 1.2D+1.6W1+1.0L(T)	0.103	0.004	0.061	0.038		
Story1	Brace	TUB50X50X2	ELU 0.9D+1.6W2(C)	0.018	0.002	0.002	0.014	0.001	0.003
Story1	Brace	TUB50X50X2	ELU 0.9D+1.6W2(T)	0.052	0.012	0.01	0.029		
Story1	Brace	TUB50X50X2	(T)	0.059	0.025	0.017	0.017	0.002	0.001
Story1	Brace	TUB50X50X2	ELU 1.2D+1.0L-1.0SX-0.3SY(C)	0.074	0.008	0.02	0.046	0.003	0.004
Story1	Brace	TUB50X50X2	ELU 0.9D+1.6W2(C)	0.013	0.006	0.006	0.001	0.001	0.001
Story1	Brace	TUB50X50X2	ELU 0.9D+1.6W2(T)	0.031	0.016	0.008	0.006		

Story	Design Type	Design Section	PMM Combo	PMM Ratio	P Ratio	M Major Ratio	M Minor Ratio	V Major Ratio	V Minor Ratio
Story1	Brace	TUB50X50X2	ELU 1.2D+1.0L-1.0SY-0.3SX(C)	0.15	0.074	0.021	0.055	0.003	0.006
Story1	Brace	TUB50X50X2	ELU 1.2D+1.0L-1.0SY-0.3SX(T)	0.096	0.001	0.024	0.072		
Story1	Brace	TUB50X50X2	ELU 1.2D+1.0L-1.0SY-0.3SX(C)	0.124	0.065	0.015	0.043	0.002	0.003
Story1	Brace	TUB50X50X2	ELU 1.2D+1.0L-1.0SY-0.3SX(T)	0.054	0.004	0.008	0.042		
Story1	Brace	TUB50X50X2	(T)	0.128	0.066	0.018	0.044	0.002	0.003
Story1	Brace	TUB50X50X2	ELU 1.2D+1.0L-1.0SY-0.3SX(C)	0.168	0.089	0.041	0.038	0.004	0.006
Story1	Brace	TUB50X50X2	ELU 1.2D+1.0L-1.0SX-0.3SY(C)	0.089	0.009	0.02	0.06	0.003	0.005
Story1	Brace	TUB50X50X2	ELU 1.2D+1.0L-1.0SX-0.3SY(T)	0.029	0.002	0.025	0.002		
Story1	Brace	TUB50X50X2	ELU 0.9D+1.6W2(C)	0.016	0.002	0.002	0.012	0.001	0.002
Story1	Brace	TUB50X50X2	ELU 0.9D+1.6W2(T)	0.046	0.02	0.009	0.017		
Story1	Brace	TUB50X50X2	(T)	0.058	0.023	0.018	0.017	0.002	0.001
Story1	Brace	TUB50X50X2	ELU 1.2D+1.0L-1.0SY-0.3SX(C)	0.03	0.017	0.009	0.005	0.001	0.001
Story1	Brace	TUB50X50X2	ELU 1.2D+1.0L-1.0SY-0.3SX(T)	0.031	0.017	0.009	0.005		
Story1	Brace	TUB50X50X2	ELU 1.2D+1.0L-1.0SY-0.3SX(C)	0.148	0.077	0.041	0.03	0.003	0.005
Story1	Brace	TUB50X50X2	ELU 1.2D+1.0L-1.0SY-0.3SX(T)	0.084	0.002	0.02	0.062		
Story1	Brace	TUB50X50X2	ELU 1.2D+1.0L-1.0SY-0.3SX(C)	0.119	0.069	0.014	0.036	0.002	0.003
Story1	Brace	TUB50X50X2	ELU 1.2D+1.0L-1.0SY-0.3SX(T)	0.045	0.003	0.006	0.036		
Story1	Brace	TUB50X50X2	(T)	0.121	0.068	0.017	0.037	0.002	0.002
Story1	Brace	TUB50X50X2	ELU 1.2D+1.0L-1.0SY-0.3SX(C)	0.166	0.092	0.041	0.032	0.003	0.006
Story1	Brace	TUB50X50X2	ELU 1.2D+1.0L-1.0SX-0.3SY(C)	0.076	0.009	0.021	0.046	0.003	0.004
Story1	Brace	TUB50X50X2	ELU 1.2D+1.0L-1.0SX-0.3SY(C)	0.089	0.009	0.021	0.059	0.004	0.005
Story1	Brace	TUB50X50X2	ELU 1.2D+1.0L-1.0SX-0.3SY(T)	0.029	0.002	0.024	0.002		
Story1	Brace	TUB50X50X2	ELU 1.2D+1.0L-1.0SX-0.3SY(C)	0.102	0.04	0.058	0.004	0.004	0.001
Story1	Brace	TUB50X50X2	ELU 1.2D+1.0L-1.0SX-0.3SY(C)	0.103	0.055	0.016	0.032	0.002	0.003

Story	Design Type	Design Section	PMM Combo	PMM Ratio	P Ratio	M Major Ratio	M Minor Ratio	V Major Ratio	V Minor Ratio
Story1	Brace	TUB50X50X2	ELU 1.2D+1.0L-1.0SX-0.3SY(C)	0.059	0.036	0.007	0.017	0.001	0.002
Story1	Brace	TUB50X50X2	ELU 1.2D+1.0L-1.0SX-0.3SY(C)	0.078	0.031	0.005	0.041	0.001	0.003
Story1	Brace	TUB50X50X2	ELU 1.2D+1.0L-1.0SX-0.3SY(C)	0.077	0.032	0.005	0.041	0.001	0.003
Story1	Brace	TUB50X50X2	ELU 1.2D+1.0L-1.0SX-0.3SY(C)	0.059	0.036	0.007	0.017	0.001	0.002
Story1	Brace	TUB50X50X2	ELU 1.2D+1.0L-1.0SX-0.3SY(C)	0.102	0.055	0.016	0.031	0.002	0.003
Story1	Brace	TUB50X50X2	ELU 1.2D+1.0L-1.0SX-0.3SY(C)	0.102	0.039	0.058	0.004	0.004	0.001
Story1	Brace	TUB50X50X2	ELU 1.2D+1.0L-1.0SX-0.3SY(C)	0.149	0.069	0.061	0.019	0.004	0.002
Story1	Brace	TUB50X50X2	ELU 1.2D+1.6W1+1.0L(C)	0.228	0.088	0.017	0.122	0.003	0.007
Story1	Brace	TUB50X50X2	ELU 1.2D+1.6W1+1.0L(C)	0.11	0.038	0.006	0.067	0.001	0.004
Story1	Brace	TUB50X50X2	ELU 1.2D+1.6W1+1.0L(C)	0.149	0.03	0.001	0.118	0.001	0.007
Story1	Brace	TUB50X50X2	ELU 1.2D+1.6W1+1.0L(C)	0.149	0.031	0.0002811	0.118	0.001	0.007
Story1	Brace	TUB50X50X2	ELU 1.2D+1.6W1+1.0L(C)	0.11	0.039	0.006	0.066	0.001	0.003
Story1	Brace	TUB50X50X2	ELU 1.2D+1.6W1+1.0L(C)	0.224	0.087	0.018	0.119	0.003	0.007
Story1	Brace	TUB50X50X2	ELU 1.2D+1.0L-1.0SX-0.3SY(C)	0.15	0.069	0.061	0.019	0.004	0.002
Story1	Brace	TUB50X50X2	ELU 1.2D+1.0L-1.0SX-0.3SY(C)	0.139	0.066	0.052	0.021	0.004	0.004
Story1	Brace	TUB50X50X2	ELU 1.2D+1.0L-1.0SX-0.3SY(C)	0.19	0.084	0.022	0.085	0.002	0.006
Story1	Brace	TUB50X50X2	ELU 1.2D+1.0L-1.0SX-0.3SY(C)	0.099	0.047	0.007	0.044	0.001	0.003
Story1	Brace	TUB50X50X2	ELU 1.2D+1.0L-1.0SX-0.3SY(C)	0.124	0.043	0.004	0.077	0.001	0.005
Story1	Brace	TUB50X50X2	ELU 1.2D+1.0L-1.0SX-0.3SY(C)	0.124	0.043	0.004	0.076	0.001	0.005
Story1	Brace	TUB50X50X2	ELU 1.2D+1.0L-1.0SX-0.3SY(C)	0.099	0.048	0.007	0.044	0.001	0.003
Story1	Brace	TUB50X50X2	ELU 1.2D+1.0L-1.0SX-0.3SY(C)	0.188	0.083	0.022	0.083	0.002	0.006
Story1	Brace	TUB50X50X2	ELU 1.2D+1.0L-1.0SX-0.3SY(C)	0.14	0.066	0.052	0.021	0.004	0.004
Story1	Brace	TUB50X50X2	ELU 1.2D+1.0L-1.0SX-0.3SY(C)	0.075	0.019	0.046	0.01	0.003	0.002
Story1	Brace	TUB50X50X2	ELU 1.2D+1.0L-1.0SX-0.3SY(T)	0.027	0.002	0.0003791	0.025		

Story	Design Type	Design Section	PMM Combo	PMM Ratio	P Ratio	M Major Ratio	M Minor Ratio	V Major Ratio	V Minor Ratio
Story1	Brace	TUB50X50X2	ELU 1.2D+1.0L-1.0SX-0.3SY(C)	0.049	0.028	0.012	0.009	0.002	0.001
Story1	Brace	TUB50X50X2	ELU 1.2D+1.0L-1.0SX-0.3SY(T)	0.018	0.005	0.001	0.011		
Story1	Brace	TUB50X50X2	ELU 1.2D+1.0L-1.0SX-0.3SY(C)	0.032	0.021	0.005	0.006	0.001	0.001
Story1	Brace	TUB50X50X2	ELU 1.2D+1.0L-1.0SX-0.3SY(T)	0.013	0.001	0.002	0.01		
Story1	Brace	TUB50X50X2	ELU 1.2D+1.0L-1.0SX-0.3SY(C)	0.037	0.017	0.004	0.016	0.001	0.002
Story1	Brace	TUB50X50X2	ELU 1.2D+1.0L-1.0SX-0.3SY(T)	0.032	0.004	0.002	0.026		
Story1	Brace	TUB50X50X2	ELU 1.2D+1.0L-1.0SX-0.3SY(C)	0.037	0.017	0.004	0.016	0.001	0.002
Story1	Brace	TUB50X50X2	ELU 1.2D+1.0L-1.0SX-0.3SY(T)	0.032	0.004	0.002	0.026		
Story1	Brace	TUB50X50X2	ELU 1.2D+1.0L-1.0SX-0.3SY(C)	0.031	0.021	0.005	0.005	0.001	0.001
Story1	Brace	TUB50X50X2	ELU 1.2D+1.0L-1.0SX-0.3SY(T)	0.013	0.001	0.002	0.01		
Story1	Brace	TUB50X50X2	ELU 1.2D+1.0L-1.0SX-0.3SY(C)	0.049	0.028	0.012	0.009	0.002	0.001
Story1	Brace	TUB50X50X2	ELU 1.2D+1.0L-1.0SX-0.3SY(T)	0.018	0.005	0.001	0.011		
Story1	Brace	TUB50X50X2	ELU 1.2D+1.0L-1.0SX-0.3SY(C)	0.076	0.018	0.046	0.011	0.003	0.002
Story1	Brace	TUB50X50X2	ELU 1.2D+1.0L-1.0SX-0.3SY(T)	0.027	0.002	0.0002633	0.025		
Story1	Brace	TUB50X50X2	ELU 1.2D+1.0L-1.0SY-0.3SX(C)	0.047	0.027	0.003	0.017	0.001	0.002
Story1	Brace	TUB50X50X2	ELU 1.2D+1.0L-1.0SY-0.3SX(C)	0.066	0.025	0.005	0.035	0.001	0.003
Story1	Brace	TUB50X50X2	ELU 1.2D+1.0L-1.0SY-0.3SX(T)	0.056	0.001	0.001	0.054		
Story1	Brace	TUB50X50X2	ELU 1.2D+1.6W2+1.0L(C)	0.071	0.003	0.001	0.067	0.001	0.005
Story1	Brace	TUB50X50X2	ELU 1.2D+1.6W2+1.0L(T)	0.067	0.0001102	0.002	0.065		
Story1	Brace	TUB50X50X2	ELU 1.2D+1.6W2+1.0L(C)	0.087	0	0.002	0.085	0.001	0.008
Story1	Brace	TUB50X50X2	ELU 1.2D+1.6W2+1.0L(T)	0.095	0.002	0.002	0.092		
Story1	Brace	TUB50X50X2	ELU 1.2D+1.6W2+1.0L(C)	0.092	0.0001185	0.002	0.09	0.001	0.008
Story1	Brace	TUB50X50X2	ELU 1.2D+1.6W2+1.0L(T)	0.095	0.001	0.002	0.092		
Story1	Brace	TUB50X50X2	ELU 1.2D+1.6W2+1.0L(C)	0.072	0.004	0.001	0.066	0.001	0.005

Story	Design Type	Design Section	PMM Combo	PMM Ratio	P Ratio	M Major Ratio	M Minor Ratio	V Major Ratio	V Minor Ratio
Story1	Brace	TUB50X50X2	ELU 1.2D+1.6W2+1.0L(T)	0.043	0	0.001	0.042		
Story1	Brace	TUB50X50X2	ELU 1.2D+1.0L-1.0SY-0.3SX(C)	0.066	0.025	0.006	0.035	0.001	0.003
Story1	Brace	TUB50X50X2	ELU 1.2D+1.0L-1.0SY-0.3SX(T)	0.055	0.0004794	0.001	0.054		
Story1	Brace	TUB50X50X2	ELU 1.2D+1.0L-1.0SY-0.3SX(C)	0.047	0.028	0.003	0.016	0.001	0.002
Story1	Brace	TUB50X50X2	ELU 1.2D+1.6W1+1.0L(C)	0.088	0.024	0.004	0.06	0.001	0.004
Story1	Brace	TUB50X50X2	ELU 1.2D+1.6W1+1.0L(C)	0.096	0.023	0.002	0.071	0.001	0.003
Story1	Brace	TUB50X50X2	ELU 0.9D+1.6W1(C)	0.108	0.011	0.001	0.096	0.001	0.005
Story1	Brace	TUB50X50X2	ELU 1.2D+1.6W1+1.0L(C)	0.131	0.008	0.001	0.122	0.001	0.009
Story1	Brace	TUB50X50X2	ELU 0.9D+1.6W1(C)	0.131	0.008	0.000123	0.122	0.001	0.009
Story1	Brace	TUB50X50X2	ELU 0.9D+1.6W1(C)	0.108	0.011	0.001	0.096	0.001	0.005
Story1	Brace	TUB50X50X2	ELU 1.2D+1.6W1+1.0L(C)	0.096	0.023	0.002	0.071	0.001	0.003
Story1	Brace	TUB50X50X2	ELU 1.2D+1.6W1+1.0L(C)	0.088	0.024	0.004	0.059	0.001	0.004
Story1	Brace	TUB50X50X2	(T)	0.028	0.01	0.004	0.015	0.001	0.001
Story1	Brace	TUB50X50X2	(T)	0.043	0.013	0.005	0.025	0.001	0.002
Story1	Brace	TUB50X50X2	ELU 0.9D+1.6W1(C)	0.009	0.001	0.002	0.006	0.001	0.002
Story1	Brace	TUB50X50X2	ELU 0.9D+1.6W1(T)	0.035	0.006	0.005	0.024		
Story1	Brace	TUB50X50X2	ELU 0.9D-1.0SY-0.3SX(C)	0.029	0.013	0.004	0.012	0.001	0.001
Story1	Brace	TUB50X50X2	ELU 0.9D-1.0SY-0.3SX(T)	0.03	0.012	0.005	0.013		
Story1	Brace	TUB50X50X2	ELU 1.2D+1.0L-1.0SY-0.3SX(C)	0.031	0.021	0.005	0.005	0.001	0.001
Story1	Brace	TUB50X50X2	(T)	0.026	0.016	0.003	0.007	0.001	0.001
Story1	Brace	TUB50X50X2	ELU 1.2D+1.0L-1.0SY-0.3SX(C)	0.044	0.019	0.004	0.021	0.001	0.002
Story1	Brace	TUB50X50X2	ELU 0.9D+1.6W2(C)	0.008	0.002	0.002	0.004	0.001	0.003
Story1	Brace	TUB50X50X2	ELU 0.9D+1.6W2(T)	0.04	0.003	0.006	0.03		
Story1	Brace	TUB50X50X2	(T)	0.047	0.002	0.005	0.04	0.001	0.004

Story	Design Type	Design Section	PMM Combo	PMM Ratio	P Ratio	M Major Ratio	M Minor Ratio	V Major Ratio	V Minor Ratio
Story1	Brace	TUB50X50X2	(T)	0.028	0.01	0.004	0.014	0.001	0.001
Story1	Brace	TUB50X50X2	(T)	0.042	0.012	0.006	0.023	0.001	0.002
Story1	Brace	TUB50X50X2	ELU 0.9D+1.6W1(C)	0.008	0.001	0.002	0.006	0.001	0.002
Story1	Brace	TUB50X50X2	ELU 0.9D+1.6W1(T)	0.035	0.007	0.005	0.024		
Story1	Brace	TUB50X50X2	ELU 1.2D+1.0L-1.0SY-0.3SX(C)	0.034	0.013	0.005	0.016	0.001	0.001
Story1	Brace	TUB50X50X2	ELU 1.2D+1.0L-1.0SY-0.3SX(T)	0.028	0.007	0.003	0.018		
Story1	Brace	TUB50X50X2	ELU 1.2D+1.0L-1.0SY-0.3SX(C)	0.032	0.022	0.005	0.006	0.001	0.001
Story1	Brace	TUB50X50X2	(T)	0.028	0.018	0.003	0.008	0.001	0.001
Story1	Brace	TUB50X50X2	ELU 1.2D+1.0L-1.0SY-0.3SX(C)	0.048	0.022	0.003	0.023	0.001	0.002
Story1	Brace	TUB50X50X2	ELU 0.9D+1.6W2(C)	0.007	0.002	0.002	0.003	0.001	0.003
Story1	Brace	TUB50X50X2	ELU 0.9D+1.6W2(T)	0.04	0.003	0.006	0.031		
Story1	Brace	TUB50X50X2	(T)	0.047	0.002	0.005	0.04	0.001	0.004

Diseño de elementos de cimentación.

Cargas en la base para diseño de cimentaciones.

Story	Unique Name	Output Case	Case Type	Step Type	FZ	MX	MY
					tonf	tonf-m	tonf-m
Base	9	Live	LinStatic		0.20	0.00	0.00
Base	9	SX	LinRespSpec	Max	0.22	0.18	0.80
Base	9	SY	LinRespSpec	Max	0.09	0.84	0.02
Base	9	W1	LinStatic		0.25	0.44	0.01
Base	9	W2	LinStatic		-0.10	0.34	0.00
Base	9	CIM 1.0D	Combination		0.66	0.00	0.01
Base	10	Live	LinStatic		0.24	0.00	0.00
Base	10	SX	LinRespSpec	Max	0.17	0.18	0.95
Base	10	SY	LinRespSpec	Max	1.26	0.84	0.02
Base	10	W1	LinStatic		0.84	0.44	0.00
Base	10	W2	LinStatic		0.23	0.34	0.00
Base	10	CIM 1.0D	Combination		0.87	0.00	0.01
Base	11	Live	LinStatic		0.20	0.00	0.00
Base	11	SX	LinRespSpec	Max	0.23	0.18	0.80
Base	11	SY	LinRespSpec	Max	0.08	0.88	0.02
Base	11	W1	LinStatic		0.24	0.44	0.00
Base	11	W2	LinStatic		-0.10	0.34	0.00
Base	11	CIM 1.0D	Combination		0.68	0.00	-0.01
Base	12	Live	LinStatic		0.24	0.00	0.00
Base	12	SX	LinRespSpec	Max	0.17	0.18	0.95
Base	12	SY	LinRespSpec	Max	1.31	0.88	0.02
Base	12	W1	LinStatic		0.83	0.44	0.00
Base	12	W2	LinStatic		0.23	0.34	0.00
Base	12	CIM 1.0D	Combination		0.90	0.00	-0.01
Base	21	Live	LinStatic		0.05	0.00	0.00
Base	21	SX	LinRespSpec	Max	0.52	0.18	0.79
Base	21	SY	LinRespSpec	Max	1.26	0.84	0.02
Base	21	W1	LinStatic		-0.51	0.44	0.00
Base	21	W2	LinStatic		-0.49	0.34	0.00
Base	21	CIM 1.0D	Combination		0.41	0.00	0.01
Base	22	Live	LinStatic		0.29	0.00	0.00
Base	22	SX	LinRespSpec	Max	0.28	0.18	0.94
Base	22	SY	LinRespSpec	Max	0.10	0.84	0.02

Story	Unique Name	Output Case	Case Type	Step Type	FZ	MX	MY
					tonf	tonf-m	tonf-m
Base	22	W1	LinStatic		0.20	0.44	0.00
Base	22	W2	LinStatic		-0.27	0.34	0.00
Base	22	CIM 1.0D	Combination		0.86	0.00	0.01
Base	23	Live	LinStatic		0.05	0.00	0.00
Base	23	SX	LinRespSpec	Max	0.51	0.18	0.79
Base	23	SY	LinRespSpec	Max	1.30	0.88	0.02
Base	23	W1	LinStatic		-0.50	0.44	0.00
Base	23	W2	LinStatic		-0.49	0.34	0.00
Base	23	CIM 1.0D	Combination		0.42	0.00	-0.01
Base	24	Live	LinStatic		0.29	0.00	0.00
Base	24	SX	LinRespSpec	Max	0.27	0.18	0.94
Base	24	SY	LinRespSpec	Max	0.08	0.88	0.02
Base	24	W1	LinStatic		0.21	0.44	0.00
Base	24	W2	LinStatic		-0.26	0.34	0.00
Base	24	CIM 1.0D	Combination		0.89	0.00	-0.01

DISEÑO ESTRUCTURAL DE ZAPATA AISLADA CUADRADA - ZAPATAS TIPO

DIMENSIONES DE COLUMNA	
Base	0.75 m
Largo	1.10 m
CARGAS DE DISEÑO	
C. Muerta CM:	11.77 Ton
C. Viva CV:	1.57 Ton
Momento MX:	1.76 Ton-m
Momento MY:	1.89 Ton-m
PRESIÓN ADMISIBLE DEL TERRENO	
Capacidad Portante:	15.00 Ton/m2
MATERIALES	
Concreto:	21.00 MPa
Acero de Refuerzo:	420.00 MPa

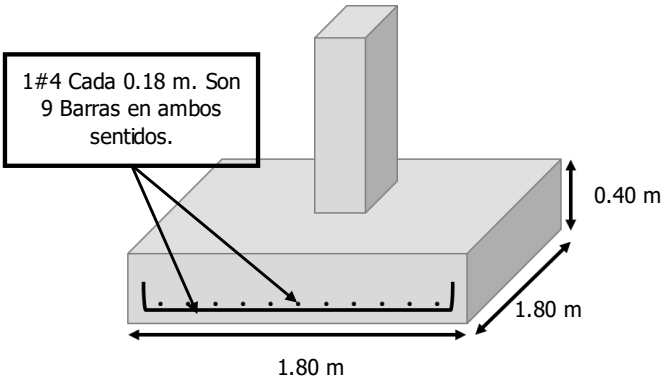

REVISIÓN DE LA PRESIÓN DE CONTACTO

$Pu = 1.2CM + 1.6CV =$	16.64 Ton
$\emptyset * 0.85 * f'c * A1 =$	9572.06 Ton
$Pu \leq \emptyset 0.85 * f'c * A1$	**¡CUMPLE!**
$Ps = Cm + Cv =$	13.34 Ton

No se necesita pedestal. El área de acero pasante será la mínima (0.005Ag) y no se requiere fuerza adicional proporcionada por el refuerzo para la transferencia de la carga.

CÁLCULO DE LAS EXCENTRICIDADES

$e_x = \frac{My}{Ps} =$ 0.14 m $\qquad e_y = \frac{Mx}{Ps} =$ 0.13 m

CÁLCULO DE LA PRESIÓN ÚLTIMA DEL TERRENO

La zapata se dimensiona de tal manera que no se sobrepase el esfuerzo admisible del suelo, pero igualmente que tampoco se presenten esfuerzos negativos en la zapata. Para esto, se presta especial atención a los puntos 1 y 3. El máximo esfuerzo se presenta para el punto 3 y el mínimo para el punto 1 y se calculan como:

$$\sigma_1 = \frac{P}{BH}\left(1 - \frac{6e_x}{H} - \frac{6e_Y}{B}\right) \geq 0 \qquad \sigma_2 = \frac{P}{BH}\left(1 - \frac{6e_x}{H} + \frac{6e_Y}{B}\right) \qquad \sigma_3 = \frac{P}{BH}\left(1 + \frac{6e_x}{H} + \frac{6e_Y}{B}\right) \leq \sigma_{adm}$$

$$\sigma_4 = \frac{P}{BH}\left(1 + \frac{6e_x}{H} - \frac{6e_Y}{B}\right)$$

Lado H=	1.80 m
Lado B=	1.80 m

$\overline{I}_X$	$\overline{I}_Y$	σ_1	σ_2	σ_3	σ_4
0.87 m4	0.87 m4	0.36 Ton-m2	3.98 Ton-m2	7.87 Ton-m2	4.25 Ton-m2
		¡CUMPLE!		**¡CUMPLE!**	

Altura h' asumida para la zapata:	0.40 m
Altura efectiva d:	0.32 m

$A.Z. = \frac{P.S.}{q_u} =$ 0.89 m $\quad \sigma_{ult} = \frac{Pu}{AZ} =$ 5.13 Ton/m2

VERIFICACIÓN DE LAS EXCENTRICIDADES

$e_x \leq \frac{H}{6} =$ 0.30 m **¡CUMPLE!**

$e_Y \leq \frac{B}{6} =$ 0.30 m **¡CUMPLE!**

Cálculo de los esfuerzos últimos sobre la zapata. Se asume un coeficiente de mayoración de 1.5 para Ps.

$1.5Ps =$ 20.01 Ton

σ_1	σ_2	σ_3	σ_4
0.54 Ton-m2	5.97 Ton-m2	11.81 Ton-m2	6.38 Ton-m2

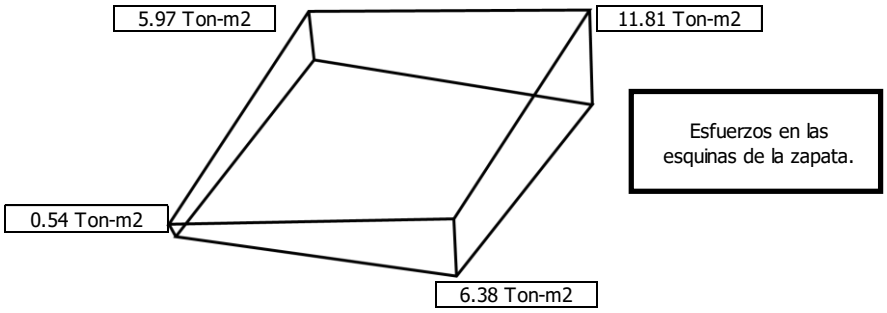

CORTANTE EN DOS DIRECCIONES

El cortante se evalua a una distancia d/2 de la cara de la columna.

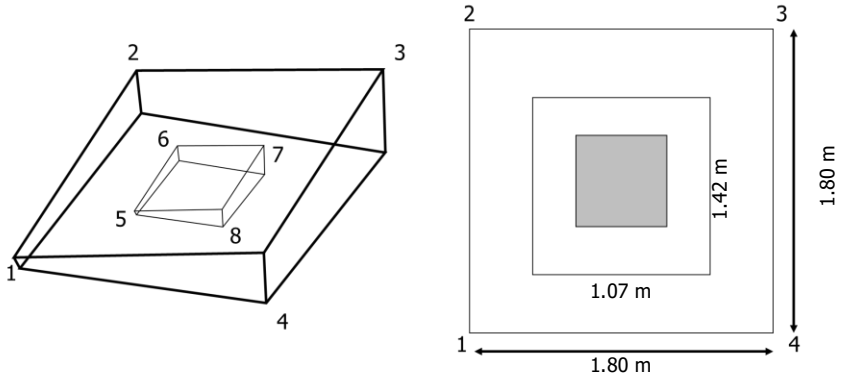

Para esto se deben calcular los esfuerzo en los puntos 5, 6, 7 y 8. Estos esfuerzos pueden calcularse directamente por medio de:

$$\sigma = \frac{Pu}{A} \pm \frac{M_{uy}L_x}{I_y} \pm \frac{M_{ux}L_y}{I_x}$$

σ_5	σ_6	σ_7	σ_8
2.30 Ton-m2	6.58 Ton-m2	10.05 Ton-m2	5.77 Ton-m2

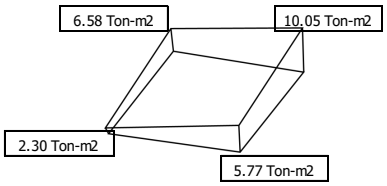

VERIFICACIÓN DEL ESPESOR ASUMIDO

$Vu = Pu - \sigma A =$ 10.63 Ton

$b_0 = 2(h+d) + 2(b+d) =$ 498.00 cm

$$d1 = \frac{Vu}{0.75 * 0.17 * \left(1 + \frac{2}{\beta}\right) * \lambda * \sqrt{f'c} * b_0} = 1.22 \text{ cm}$$

$d > d1$ **¡CUMPLE!**

$$d2 = \frac{Vu}{0.75 * 0.083 * \left(\frac{\alpha_s * d_2}{b_0} + 2\right) * \lambda * \sqrt{f'c} * b_0} = 1.30 \text{ cm}$$

$d > d2$ **¡CUMPLE!**

$$d3 = \frac{Vu}{0.75 * 0.33 * \lambda * \sqrt{f'c} * b_0} = 1.88 \text{ cm}$$

$d > d3$ **¡CUMPLE!**

CORTANTE EN UNA DIRECCIÓN

Se analiza el cortante en la dirección paralela a la que se presentan los esfuerzos mayores (2-3). El cortante se evalua a una distancia *d* de la cara de la columna.

σ_1	σ_2	σ_3	σ_4	σ_{1-2}	σ_{3-4}
0.54 Ton-m2	5.97 Ton-m2	11.81 Ton-m2	6.38 Ton-m2	5.88 Ton-m2	11.72 Ton-m2

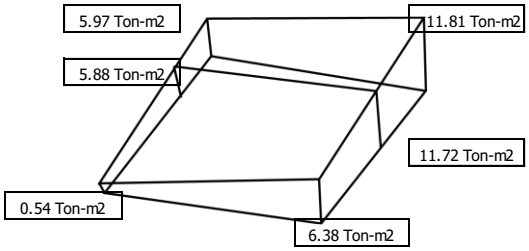

$Vu = \sigma_{ult} * A =$ 0.48 Ton

$$d \geq \frac{Vu}{0.75 * 0.17 * \lambda * \sqrt{f'c} * B} = 0.45 \text{ cm}$$

¡CUMPLE!

DISEÑO A FLEXIÓN

Se diseña para la seción más cargada, o sea para una linea paralela a 2-3 pasando por la cara de la columna.

σ_1	σ_2	σ_3	σ_4	σ_{1-2}	σ_{3-4}
0.54 Ton-m2	5.97 Ton-m2	11.81 Ton-m2	6.38 Ton-m2	4.92 Ton-m2	10.75 Ton-m2

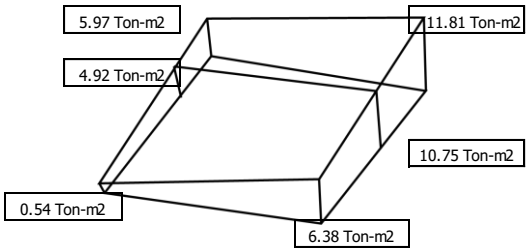

$Vu = \sigma_{ult} * A =$ 5.27 Ton

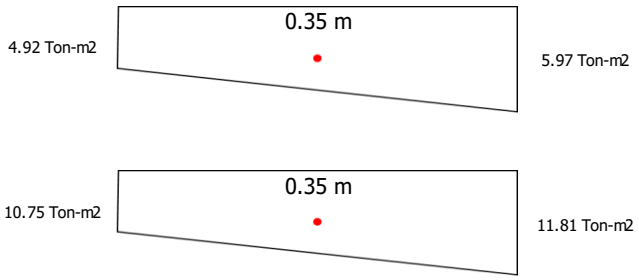

$\bar{X}_1 =$ 0.18 m

$\bar{X}_2 =$ 0.18 m

$\bar{X}_{PROMEDIO} =$ 0.18 m

$Mu = Vu * \bar{X}_{PROMEDIO} =$ 0.94 Ton-m

$$Rn = \frac{Mu}{0.9 * b * d^2} = 0.06 \text{ N/mm2}$$

$$\rho = \frac{0.85 * f'c}{fy} * \left(1 - \sqrt{1 - \frac{2 * Rn}{0.85 * f'c}}\right) = 0.0001$$

$As = \rho * b * d =$ 10.37 cm2

$\rho min =$ 0.0018
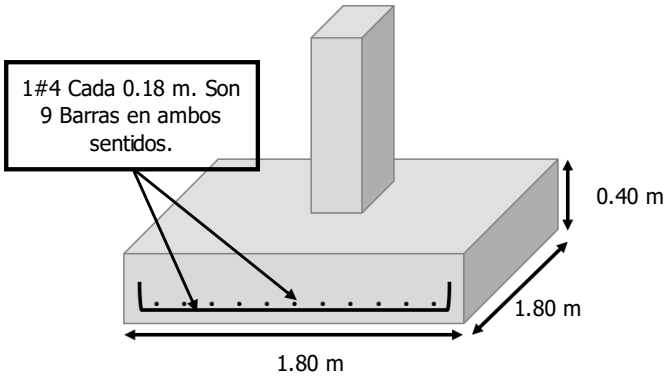
Ref. Barra	Área	N° de Barras	Separación
#4	1.29 cm2	9	0.18 m